PROJECT:

Dental Clinic Alterations:

Tri County Community Action Agency
1126 Hartford Avenue
Johnston, Rhode Island

CONTACTS

OWNER:

TRI-COUNTY COMMUNITY ACTION AGENCY
1126 HARTFORD AVE, JOHNSTON, RI 02919
CONTACT: JOE DESANTIS
401-351-2750

MECHANICAL ENGINEER:

ENGINEERING DESIGN SERVICES
141 INDUSTRIAL DRIVE
PO BOX 986
NORTH SMITHFIELD, RI 02876
CONTACT: GLEN MARKEY, PE
401-765-7659

ARCHITECT:

CASTELLONE ARCHITECTURE
792 GREAT ROAD
LINCOLN, RI 02865
CONTACT: PAUL CASTELLONE, AIA
401-465-9861
paulcastellone@cox.net

DRAWING INDEX

ARCHITECTURAL

T-1	COVER PAGE
T-2	CODE DATA, GENERAL NOTES, WALL TYPES
T-3	LIFE SAFETY PLAN / EGRESS
D1-1	DEMOLITION FLOOR PLAN, DEMOLITION NOTES
D1-2	DEMOLITION CEILING PLAN
A1-1	FLOOR PLAN - DENTAL
A1-2	REFLECTED CEILING PLAN
A1-3	FURNITURE & EQUIPMENT PLAN
A1-4	FLOOR FINISH PLAN
A3-1	DETAILS
A3-2	DETAILS
A4-1	DOOR / HARDWARE SCHEDULES, DETAILS
A4-2	ROOM FINISH SCHEDULE, FINISHES LEGEND

MECHANICAL

MD1-1	MECHANICAL DEMOLITION PLAN
M0-1	MECHANICAL LEGENDS AND NOTES
M1-1	MECHANICAL REF CEILING PLAN
M2-1	MECHANICAL SCHEDULES AND DETAILS
MD3-1	SPECIFICATIONS

ELECTRICAL

ED1-1	ELECTRICAL DEMOLITION PLAN
E1-0	ELECTRICAL LEGENDS, NOTES, DETAILS
E1-1	ELECTRICAL - LIGHTING PLAN
E1-2	ELECTRICAL - POWER PLAN
E2-1	ELECTRICAL SCHEDULES AND DETAILS
E3-1	ELECTRICAL SPECIFICATIONS
E3-2	ELECTRICAL SPECIFICATIONS
E3-3	ELECTRICAL SPECIFICATIONS

PLUMBING

PD1-1	DEMOLITION PLAN, PLUMBING
P0-1	PLUMBING LEGENDS AND NOTES
P1-1	PLUMBING SECOND FL CEILING PLAN
P1-2	PLUMBING FIRST FL CEILING PLAN (WASTE AND VENT)
P1-3	PLUMBING FLOOR PLAN (VACUUM, AIR , AND WATER)
P2-1	PLUMBING SPECIFICATIONS
P2-2	PLUMBING SPECIFICATIONS

SYMBOLS LEGEND

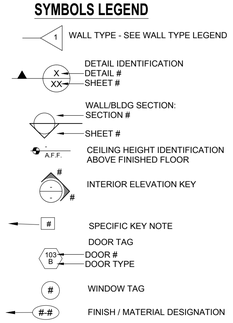

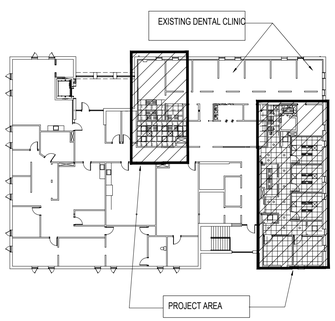

NORTH
KEY PLAN - SECOND FLOOR
NO SCALE

PROJECT
2ND FL

NORTH
AERIAL
NO SCALE

SITE

NORTH
LOCUS MAP
NO SCALE

castellone architecture
792 great road
lincoln, ri 02865
401-465-9861

ENGINEERING DESIGN SERVICES INCORPORATED
141 Industrial Highway Scituate, RI 02876
Tel (401) 765-7659 Fax (401) 765-2984

DRAWN BY: PAC
JUNE 12, 2026
REVISIONS:

DENTAL CLINIC 2ND FLOOR ALTERATIONS

TRI-COUNTY COMMUNITY ACTION AGENCY
1126 HARTFORD AVENUE
JOHNSTON, RI 02919

COVER PAGE

T-1

WALL TYPES

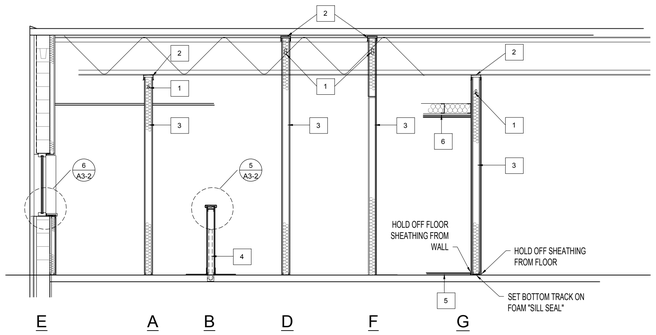

WALL TYPES
1/4" = 1'-0"

WALL TYPE KEY NOTES

1. SPAZZER-5400 BRIDGING/SPACER BAR, INSTALL NOT MORE THAN 12" FROM TOP OF WALL. INSTALL PER MFR'S INSTRUCTIONS.
2. SLIP TRACK AT TOP OF STUD WALL. DO NOT FASTEN STUDS TO TRACK. HOLD STUDS ½" FROM TRACK.
3. SOUND ATTENUATION BATT
4. 2 X 2 X 30" TS POST. CORE-DRILL EXISTING SLAB AND SET IN NON-SHRINK GROUT, INSTALLED AT ENDS OF LOW WALLS, AND EVERY 8'-0" O.C.
5. PUMP RM FLOOR: 1 LAYER 5/8" FIRE-RESISTANT TREATED PLYWOOD OVER 3/4" HOMASOTE 440 SOUND BARRIER. ADHERE PANELS WITH ADHESIVE THAT MEETS APA-AFG-01. HOLD BACK SUB FLOOR FROM WALLS.
6. PUMP ROOM CEILING: 6" METAL JOISTS @ 24" O.C.. INSTALL 6" SOUND ATTENUATION BATT BETWEEN JOISTS. INSTALL RESILIENT METAL CHANNELS (RC-2 OR DWFC MOUNTED TO THE BOTTOM OF JOISTS WITH SOUND CLIPS). INSTALL PADDING TAPE OVER BOTTOM OF CHANNELS. INSTALL 3/4" HOMASOTE 440 BARRIER OVER CHANNELS. INSTALL 5/8" GWB OVER HOMASOTE.

GENERAL WALLTYPE NOTES

1. PROVIDE CEMENT BOARD IN LIEU OF GYPSUM BOARD FOR NEW WALLS AT ALL LOCATIONS INDICATED TO RECEIVE CERAMIC TILE / BASE.
2. ALL JOINTS SHALL BE TAPED AND FINISHED IN ACCORDANCE WITH THE BOARD MANUFACTURER'S WRITTEN SPECIFICATIONS.
3. PRIME, PAINT, AND PREPARE WALL SUBSTRATES TO RECEIVE FINISH SPECIFIED.
4. PROVIDE MOISTURE RESISTANT GYPSUM BOARD AT ALL "WET" AREAS, INCLUDING TOILET ROOMS, JANITORS CLOSETS, AND IN OTHER AREAS SUBJECT TO WET CONDITIONS (ADJACENT TO KITCHEN SINKS, OR ANY OTHER PLUMBING FIXTURE.)
5. MAXIMUM VERTICAL UNSUPPORTED HEIGHT FOR AN L/240 ALLOWABLE DEFLECTION SHALL BE 12'-2" FOR A 3 5 / 8" METAL STUD WALL. TYPICAL STUD SPECIFICATION UNLESS OTHERWISE NOTED:
   - ASTM A1003 ST33H STEEL
   - STUD #: 3625125-18. 3-5/8" X 1-1/4" X 25 GA.
6. REVIEW ALL DRAWINGS FOR ALL ITEMS THAT WILL REQUIRE BACK BLOCKING IN WALLS, AND COORDINATE WORK SO THAT BLOCKING IS INSTALLED PRIOR TO INSTALLATION OF SUBSTRATES OVER PARTITIONS.
7. PROVIDE 3" MINIMUM SOUND ATTENUATION BLANKETS IN TOILET ROOM AND OFFICE WALLS AND WHERE OTHERWISE INDICATED IN DRAWINGS.
8. WHERE NON FIRE-RESISTANT RATED WALLS INTERSECT FIRE RATED WALLS, INSTALL CONTINUOUS FIRE-RATED SHEATHING OVER THE FIRE-RATED WALL PRIOR TO INSTALLING THE INTERSECTING NON-RATED WALL, SO AS NOT TO COMPROMISE THE FIRE-RATED ASSEMBLY.
9. FURNISH AND INSTALL ACCESS PANELS WHERE REQUIRED. USE FIRE-RATED PANELS IN RATED WALL ASSEMBLIES. SUBMIT PRODUCT DATA AND PANEL LOCATIONS TO ARCHITECT FOR APPROVAL PRIOR TO ORDERING.

INTERIOR WALL TYPES

A. 3 5 / 8" METAL STUDS AT 16" O.C. WITH 1 LAYER 5/8" GYPSUM BOARD EACH SIDE. FRICTION-FIT 3 1/2" MINERAL WOOL SOUND ATTENUATION BATT BETWEEN STUDS. EXTEND ASSEMBLY TO 8" ABOVE FINISHED CEILING. BRACE TOP OF WALL TO STRUCTURE.
B. 48" LOW WALL - 5/8" GYPSUM BOARD OVER 3 5/8" METAL STUDS AT16" O.C.. INSTALL CLEAR MAPLE CAP. PAINT FINISH OR WOOD VENEER PANELS AS OCCURS.
C. 5/8" GYPSUM BOARD OVER BOTH SIDES OF METAL STUD INFILL AT EXISTING OPENINGS. ALIGN GYPSUM BOARD FLUSH WITH ADJACENT FINISH. FRICTION-FIT SOUND ATTENUATION BATT BETWEEN STUDS.
D. CORRIDOR WALL /DEMISING WALL- SAME CONSTRUCTION AS TYPE "A". EXTEND WALL TO UNDERSIDE OF ROOF DECK. PROVIDE SLIP TRACK AT TOP OF WALL.
E. EXTERIOR WALL: 5/8" GYPSUM BOARD OVER 2" METAL STUDS @ 24" O.C. OVER 1" RIGID INSULATION. EXTEND TO UNDERSIDE OF ROOF DECK. INSTALL KRAFT FACED FIBERGLASS BATT INSULATION BETWEEN STUDS.
F. SIMILAR CONSTRUCTION TO WALL TYPE "A". INSTALL STUDS FROM TOP OF EXISTING WALL TO UNDERSIDE OF DECK. SEAL ALL PENETRATIONS THROUGH WALL. FILL VOIDS AT ROOF DECK.
G. (PUMP ROOM) 3 5/8" METAL STUDS AT 16" O.C. SET BOTTOM TRACK ON LAYER OF FOAM "SILL-SEAL" WITH ONE BASE LAYER OF 3/4" HOMOSOTE 440 SOUND BARRIER EACH SIDE, AND ADHERE (NO SCREWS) ONE FINISH LAYER 5/8" GYPSUM BOARD EACH SIDE WITH ADHESIVE THAT MEETS APA AFG-01. EXTEND WALL TO UNDERSIDE OF JOISTS. SEAL ALL PENETRATIONS WITH EXPANDING CLASS A-RATED FOAM

MILLWORK NOTES

GENERAL MILLWORK NOTES

1. ALL MILLWORK SHALL BE FABRICATED IN ACCORDANCE WITH THE LATEST EDITION OF ARCHITECTURAL WOODWORK INSTITUTE'S "ARCHITECTURAL WOODWORK STANDARDS", CUSTOM GRADE.

2. VERIFY ALL DIMENSIONS WITH CATALOG CUTS OF ACTUAL EQUIPMENT AND HARDWARE TO BE USED. COORDINATE ROUGH-IN LOCATIONS WITH FIELD DIMENSIONS PRIOR TO FABRICATION. FIELD-CUT PLYWOOD COUNTERTOPS.

3. UNLESS NOTED OR DETAILED OTHERWISE, PROVIDE A 4" LAMINATED BACKSPLASH WHERE COUNTERTOPS MEET WALLS. FINISH TO MATCH COUNTERTOP.

4. UNLESS NOTED OR DETAILED OTHERWISE, INTERIOR CONCEALED SHELVING SHALL BE 3 / 4" MELAMINE WITH PVC EDGE BAND. EXPOSED SHELVING SHALL BE 3/4" PLYWOOD WITH PLASTIC LAMINATE FINISH AND PVC EDGE BAND.

5. SCRIBE AND CUT MILLWORK DURING INSTALLATION TO COMPENSATE FOR IRREGULAR WALL AND FLOOR SURFACES. INSTALLATION SHALL BE LEVEL AND TIGHT AT ALL FLOOR AND WALL SURFACES.

6. CAULK ALL SCRIBED JOINTS WITH CLEAR SILICONE SEALANT, OR COLORED SEALANT AS APPROVED BY ARCHITECT.

7. PROVIDE AND INSTALL NESTED FIRE-RATED, PRESSURE TREATED WOOD OR METAL BLOCKING IN WALL CONSTRUCTION TO ADEQUATELY SUPPORT THE MILLWORK FOR ITS INTENDED USE. PROVIDE NON-COMBUSTIBLE OR FIRE-RATED BLOCKING IN FIRE-RATED WALL ASSEMBLIES.

8. ALL HORIZONTAL PLASTIC LAMINATE SURFACES SHALL HAVE MANUFACTURERS' APPROVED ABRASIVE-RESISTAN FINISH.

9. WHERE THE EDGES OF PLASTIC LAMINATE ARE EXPOSED, PLASTIC LAMINATES SHALL HAVE BLACK BACKING.

10. WOOD VENEER SHALL BE ROTARY CUT, BOOKMATCHED AND FREE FROM FOOTBALL PLUGS, KNOTS, OR ANY OTHER TYPES OF DEFECTS.

11. HARDWARE: UNLESS NOTED OR SPECIFIED OTHERWISE, MILLWORK HARDWARE SHALL CONSIST OF THE FOLLOWING:
    HEAVY DUTY, FULL EXTENSION DRAWER SLIDES.
    HEAVY DUTY, CONCEALED HINGES WITH 170 DEGREE OPENINGS.
    4" SATIN OR BRUSHED STAINLESS STEEL OR NICKEL PULLS
        HAFELE "BELLA ITALIANA" #100.89.102 OR EQUAL
    BLACK PLASTIC GROMMETS AND COVERS FOR ELECTRICAL PLUG-IN CONNECTIONS RELATED TO MILLWORK ITEMS.

GENERAL NOTES

GENERAL NOTES

1. CONTRACTOR SHALL VISIT THE SITE PRIOR TO SUBMITTING THEIR BID TO FAMILIARIZE THEMSELVES WITH CONDITIONS AT THE SITE.
2. DISCREPANCIES BETWEEN PORTION OF THE DOCUMENTS ARE NOT INTENDED. THE CONTRACTOR SHALL CLARIFY AND RESOLVE ANY SUCH DISCREPANCIES WITH THE ARCHITECT PRIOR TO COMMENCING THE WORK IN QUESTIONS.
3. DO NOT SCALE DRAWINGS TO DETERMINE LOCATIONS OF EQUIPMENT AND LAYOUT OF THE WORK.
4. UNLESS NOTED OTHERWISE, ALL ARCHITECTURAL DIMENSIONS ARE FROM FACE OF EXISTING WALL OR CONCRETE MASONRY UNITS TO FACE OF NEW WALL SHEATHING.
5. UNLESS OTHERWISE AGREED TO IN WRITING WITH THE OWNER, THE CONTRACTOR SHALL SECURE ALL PERMITS (BUILDING, MECHANICAL, ELECTRICAL, PLUMBING), AND CERTIFICATE OF OCCUPANCY, AND FEES FOR SAME.
6. UNLESS OTHERWISE AGREED TO WITH THE OWNER, THE CONTRACTOR SHALL PAY FOR AND ARRANGE ANY REQUIRED TEMPORARY SERVICES.
7. THE CONTRACTOR SHALL MAINTAIN CLEAN AND ORDERLY WORK AREAS AND SHALL NOTE ALLOW TRASH AND DEBRIS TO ACCUMULATE. UPON COMPLETION OF THE WORK, ALL SURFACES IN THE WORK AREAS, INCLUDING SURFACES WITH EXISTING FINISHES TO REMAIN, SHALL BE DUSTED, VACUUMED, WASHED, OR OTHERWISE CLEANED TO BE FREE OF CONTAMINANTS.
8. THE CONTRACTOR SHALL MAINTAIN ONE COMPLETE SET OF APPROVED CONTRACT DOCUMENTS, INCLUDING ALL REVISIONS, ADDENDA, AND CHANGE ORDERS, ON THE PREMISES AT ALL TIMES. THESE DOCUMENTS SHALL NOT BE USED BY WORKMEN.
9. CONTRACTOR SHALL COMPLY WITH ALL PUBLISHED FEDERAL, STATE, AND LOCAL REQUIREMENTS FOR SAFETY AND ACCIDENT PREVENTION.
10. CONTRACTOR SHALL MAINTAIN AT LEAST TWO TYPE 2A-10 BC FIRE EXTINGUISHERS ON SITE AT ALL TIMES DURING CONSTRUCTION.
11. THE CONTRACTOR SHALL BE RESPONSIBLE FOR 24-HOUR SECUREMENT OF THE WORK PREMISES WHILE THE JOB IS IN PROGRESS UNTIL TURNOVER OF THE PROJECT TO THE OWNER.
12. THE CONTRACTOR SHALL MAINTAIN MEANS OF EGRESS DURING CONSTRUCTION, AS REQUIRED BY NFPA 101 LIFE SAFETY CODE, CURRENT EDITION.
13. WORK BY OTHERS: THE OWNER RESERVES THE RIGHT TO PERFORM ADDITIONAL WORK THAT IS NOT PART OF THE CONTRACT WITH HIS OWN FORCES/VENDORS. THE CONTRACTOR SHALL COOPERATE WITH THE OWNER AND HIS CONTRACTORS/VENDORS, AND COORDINATE HIS WORK WITH THE OWNER SO THAT WORK BY OTHERS CAN BE INCORPORATED IN A TIMELY MANNER.
14. ALL MATERIALS/PRODUCTS/EQUIPMENT SHALL BE FURNISHED, STORED, AND INSTALLED IN STRICT ACCORDANCE WITH MANUFACTURERS' PUBLISHED INSTRUCTIONS. WHEN NOT IN CONFLICT WITH MANUFACTURERS' INSTRUCTIONS, MATERIALS AND METHODS SHALL ALSO BE INSTALLED IN ACCORDANCE WITH THE CURRENT EDITION OF THE APPROPRIATE NATIONAL TRADE HANDBOOK (AWI QUALITY STANDARDS, USG GYPSUM CONSTRUCTION HANDBOOK, TCA HANDBOOK FOR CERAMIC TILE INSTALLATION, ETC.)
15. SUBSTITUTIONS: ANY SUBSTITUTIONS FOR SPECIFIED MATERIALS/PRODUCTS/EQUIPMENT MUST BE SUBMITTED IN WRITING WITH THE BID, ALONG WITH THE REASON FOR THE SUBSTITUTION, PROPOSED PRODUCT DATA, SAMPLES, ETC., AND THE COST SAVINGS TO THE OWNER. EVALUATION FOR THE PROPOSED SUBSTITUTION MAY REQUIRE ADDITIONAL SERVICES IN THE FORM OF RESEARCH AND RE-DESIGN ON THE PART OF THE ARCHITECT AND THEIR CONSULTANTS. THE OWNER SHALL BE NOTIFIED OF THE NEED FOR ADDITIONAL SERVICES PRIOR TO REVIEW OF THE SUBSTITUTION BY THE ARCHITECT, AND THE OWNER SHALL AUTHORIZE ADDITIONAL SERVICES PRIOR TO THE ARCHITECT COMMENCING THEIR REVIEW. SUBSTITUTIONS SHALL NOT BE SUBMITTED DURING THE SUBMITTAL REVIEW PROCESS.
16. WARRANTY: THE CONTRACTOR SHALL BE RESPONSIBLE FOR, AND SHALL REPLACE OR REMEDY ANY FAULTY, IMPROPER, OR INFERIOR MATERIALS, PRODUCTS, EQUIPMENT, OR WORKMANSHIP WHICH SHALL APPEAR WITHIN ONE (1) YEAR OF OWNER'S ACCEPTANCE OF THE WORK, OR AS OTHERWISE INDICATED IN SPECIFIED WARRANTIES FOR A SPECIFIC COMPONENT/EQUIPMENT/SYSTEM.
17. CONTRACTOR SHALL PROVIDE NESTED BACK-BLOCKING AS REQUIRED TO ACHIEVE FIRM ATTACHMENT OF ALL ARCHITECTURAL WOODWORK, AND ALL WALL AND/OR CEILING MOUNTED FINISHES, FIXTURES, EQUIPMENT, AND ACCESSORIES.
18. CONTRACTOR SHALL PROVIDE A BEAD OF SANITARY, MILDEW-RESISTANT SEALANT AT THE FOLLOWING LOCATIONS:

    METAL DOOR FRAME TO WALL TRANSITION JUNCTION OF MILLWORK AND ADJACENT SURFACES, INCLUDING TOP OF BACK SPLASHES TOILET ACCESSORIES AND FIXTURES AND WALLS WINDOW FRAMES AND TRIM WORK/WALL ELSEWHERE AS INDICATED ON THE DRAWINGS, AND AS REQUIRED BY AUTHORITIES HAVING JURISDICTION.
19. PROVIDE PAINTABLE/STAINABLE SEALANT AT ALL AREAS SCHEDULED TO RECEIVE PAINT OR STAIN. REVIEW SEALANT COLOR AND LOCATIONS WITH ARCHITECT PRIOR TO FURNISHING AND INSTALLATION.
20. WHERE PIPES, CONDUIT, CABLE WIRES, DUCTS, OR SIMILAR BUILDING SERVICE EQUIPMENT PASS THROUGH FIRE/SMOKE-RATED ASSEMBLIES, THE SPACE BETWEEN THE PENETRATING ITEM AND THE RATED ASSEMBLY SHALL BE FILLED WITH A MATERIAL CAPABLE OF MAINTAINING THE SMOKE/FIRE-RESISTANCE OF THE ASSEMBLY.

PROJECT DATA

PROJECT DATA - DENTAL SUITE

BUILDING CODES:
RI FIRE SAFETY CODE - NFPA 101 "LIFE SAFETY CODE", 2012 ED.
SBC-1 2013 "RHODE ISLAND STATE BUILDING CODE" (IBC, 2012 ED. W/ RI AMENDMENTS)
SBC-8 2013 "RHODE ISLAND ENERGY CONSERVATION CODE"(ICC 2012 ED. W/ RI AMENDMENTS

USE GROUP (SBC-1): B - BUSINESS

CONSTRUCTION TYPE: 2B (NON-COMBUSTIBLE, UN PROTECTED)

PROJECT AREA

DENTAL CLINIC AREA	1,990 SF	
BREAK ROOM AREA:	360 SF	
TOILET ROOM AREA:	292 SF	
TOTAL PROJECT AREA:	2,642 SF	
TOTAL FLOOR AREA:	9,060 SF	2ND FLOOR
ALLOWABLE AREA (SECTION 507.3):		23,000 SF / STORY
ALLOWABLE STORIES:		3
EXISTING STORIES:		2

PROJECT OCCUPANT LOAD (SBC-1 TABLE 1004.1.1):

B Business Areas (DENTAL SUITE AND BREAK ROOM): 2,350 SF @ 100 gross

PROJECT OCCUPANT LOAD: 24

TOILET ROOMS:
SEPARATE SEX FACILITIES REQUIRED (SBC-3, 403.2): YES

OCCUPANTS PER FLOOR (100 SF/OCC): 91

PLUMBING FIXTURES REQUIRED (SBC-3, TABLE 403.1)

FIXTURES / FLOOR	REQUIRED:	PROVIDED:
TOILETS M/F:	4	6
URINALS	1	1
LAVATORIES:	4	6
JANITOR SINK	1	1

SPRINKLER SYSTEM: YES, EXISTING

FIRE ALARM SYSTEM: YES, EXISTING

COMMON PATH OF TRAVEL(SBC-1 TABLE1014.3))

ALLOWABLE: 100' PROJECT: 77'

SPACES WITH ONE EXIT OR EXIT ACCESS DOORWAY (TALE 1015.1):

OCCUPANCY B MAX OCC. LOAD: 49

TRAVEL DISTANCE TO EXIT (SBC-1 TABLE 1016.2):

ALLOWABLE: 300' PROJECT: 194'

FIRE SEPARATION REQUIREMENTS:

CORRIDORS (1018.1): 0 HR
EXIT STAIRWAYS: 1 HR

DEAD END CORRIDORS (SBC-1 1018.4)

ALLOWABLE- 50' PROJECT: 14'

NUMBER OF EXITS (SBC-1, 1021): REQUIRED: 2 (EXISTING)

castellone architecture
792 great road
lincoln, ri 02865
401-465-9861

DRAWN BY: PAC
JUNE 12, 2026
REVISIONS:

DENTAL CLINIC 2ND FLOOR ALTERATIONS

TRI-COUNTY COMMUNITY ACTION AGENCY
1126 HARTFORD AVENUE
JOHNSTON, RI 02919

CODE DATA, GENERAL NOTES, WALL TYPES

T-2

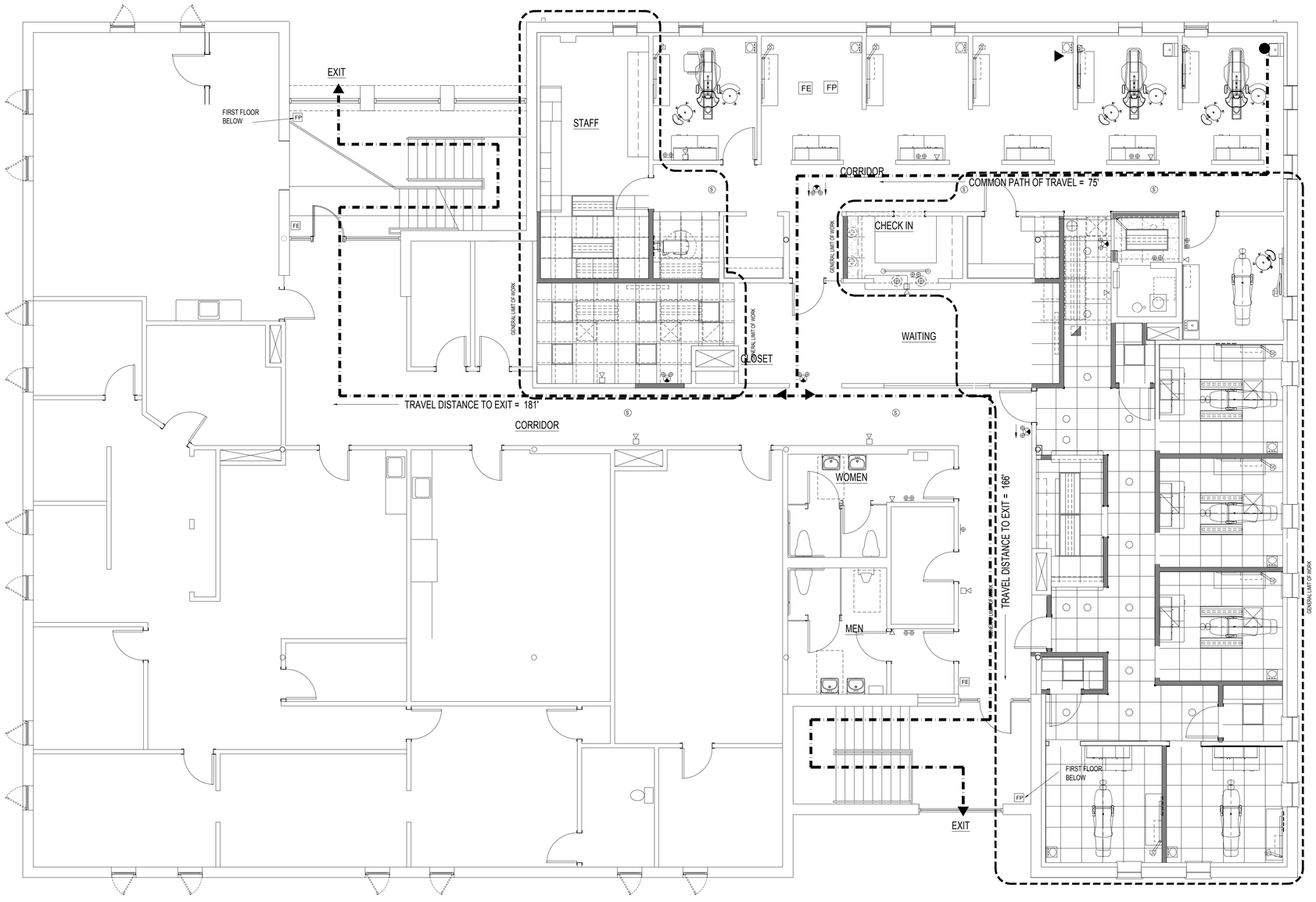

SECOND FLOOR LIFE SAFETY PLAN / EGRESS
3/16" = 1'-0"
NORTH

KEY NOTES

1. EXISTING EXIT SIGN, EMERGENCY LIGHTS, AND FIRE ALARM PULL. FIRE EXTINGUISHER, AND EXTERIOR EMERGENCY LIGHT LOCATED AT EXISTING EXIT DOORS.
2. EXIST EXIT SIGN ABOVE DOOR TO REMAIN
3. EXISTING EXIT SIGN, AND EMERGENCY LIGHTS TO REMAIN.
4. NOT USED
5. REMOVE EXISTING EXIT SIGN ABOVE DOOR.

LIFE SAFETY SYMBOLS LEGEND

REFER TO ELECTRICAL "LS" DRAWINGS FOR DEVICE SPECIFICATIONS

- EXIT SIGN / EMERGENCY LIGHT COMBINATION
- EXIT SIGN - SINGLE FACE
- EXIT SIGN - DOUBLE FACE
- EMERGENCY LIGHT - DBL HEAD
- EMERGENCY LIGHT - SINGLE HEAD
- FP EXISTING FIRE PULL
- FE EXISTING FIRE EXTINGUISHER
- HORN / STROBE
- STROBE
- S SMOKE DETECTOR
- PATH OF TRAVEL TO EXIT

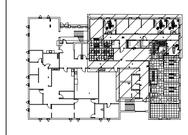

KEY PLAN
SECOND FLOOR
NORTH

castellone architecture
792 great road
lincoln, ri 02865
401-465-9861

DRAWN BY: PAC
JUNE 12, 2026
REVISIONS:

DENTAL CLINIC 2ND FLOOR ALTERATIONS

TRI-COUNTY COMMUNITY ACTION AGENCY
1126 HARTFORD AVENUE
JOHNSTON, RI 02919

LIFE SAFETY PLAN / EGRESS

T-3

GENERAL DEMOLITION NOTES

1. IN THE EVENT THAT SUSPECTED HAZARDOUS MATERIALS ARE DISCOVERED DURING THE COURSE OF DEMOLITION, CEASE WORK IMMEDIATELY AND NOTIFY THE BUILDING OWNER OF ANY SUCH DISCOVERIES.

2. IN ACCORDANCE WITH FEDERAL REGULATIONS PROMULGATED UNDER THE CLEAN AIR ACT, AND COMMONLY REFERRED TO AS ASBESTOS NESHAP, MORE SPECIFICALLY, 40 CFR PART 61, SUBPART M, SECTION 61.145, THE CONTRACTOR SHALL VERIFY THAT AN ASBESTOS SURVEY HAS BEEN
3. CONDUCTED PRIOR TO THE COMMENCEMENT OF DEMOLITION OR RENOVATION WORK WHICH IS PART OF THIS CONTRACT.

4. IN ACCORDANCE WITH ABOVE REGULATION REQUIREMENTS, THE CONTRACTOR SHALL FILE WRITTEN NOTIFICATION WITH THE EPA PRIOR TO ANY DEMOLITION WORK BEING PERFORMED REGARDLESS OF THE AMOUNT OF ASBESTOS, INCLUDING ZERO.

5. ALL DEMOLITION WORK SHALL BE PERFORMED IN ACCORDANCE WITH FEDERAL, STATE AND LOCAL REGULATIONS. SECURE REQUIRED PERMITS. ARRANGE WITH BUILDING OWNER AND/OR APPROPRIATE UTILITY COMPANIES FOR SERVICE SHUTOFFS BEFORE BEGINNING DEMOLITION OPERATIONS.

6. CONSULT WITH OWNER AND FIRE OFFICIALS PRIOR TO MAKING ANY ALTERATIONS TO THE EXISTING FIRE ALARM SYSTEM.

7. COORDINATE ALL DEMOLITION OPERATIONS WITH OWNER FOR SHUTDOWN PERIODS AND SEQUENCE OF WORK. PROVIDE TEMPORARY DUST PARTITIONS, BARRICADES, SIGNAGE, AND PROTECTIVE ENCLOSURES REQUIRED TO PROPERLY SECURE, ISOLATE, WATERPROOF, AND PROTECT AREAS OF WORK FROM EXISTING AREAS TO REMAIN IN OPERATION AND TO ASSURE CONTINUING FACILITY OPERATIONS IN GENERAL. IDENTIFY AND PROTECT ANY AREAS WHERE DEMOLITION IS TO TAKE PLACE WHERE THE DEMOLITION CREATES A PHYSICAL SAFETY HAZARD. THE CONTRACTOR SHALL KEEP THE CORRIDORS AND EXITS CLEAR OF DEBRIS, STORED MATERIALS, ETC., AT ALL TIMES TO PROVIDE REQUIRED FIRE EGRESS FROM THE BUILDING.

8. MAKE EVERY EFFORT POSSIBLE TO MINIMIZE DISTURBANCES TO BUILDING OCCUPANTS. COORDINATE HOURS OF DISRUPTIVE DEMOLITION WITH BUILDING OWNER PRIOR TO COMMENCEMENT.

9. IT IS NOT THE INTENT TO SHOW EVERY PIECE OR ITEM TO BE REMOVED IN DEMOLITION WORK. MECHANICAL, ELECTRICAL AND OTHER WORK RELATED TO A WALL OR AREA SCHEDULED FOR DEMOLITION AND REMOVAL SHALL BE REMOVED WHETHER SPECIFICALLY ITEMIZED OR NOT. TERMINATE, CAP AND REMOVE ALL ABANDONED ELECTRICAL CONDUIT, WIRING BOXES, SWITCHES, ETC; PLUMBING, PIPING, AND PLUMBING FIXTURES, ETC; HVAC DUCTWORK, CONTROLS, PIPING, ETC; AS REQUIRED.

10. WHEN WALLS, COLUMNS, OR OTHER SUPPORTING AND/OR BRACING ELEMENTS ARE SCHEDULED FOR DEMOLITION, TEMPORARY STRUCTURAL SUPPORTS AND BRACING FOR THE ADJACENT CONSTRUCTION SHALL BE PROVIDED AND MAINTAINED UNTIL THE PERMANENT SUPPORTING STRUCTURES ARE IN PLACE AND ABLE TO SUPPORT IMPOSED LOADS. ANY STRUCTURAL BRACING DISCOVERED DURING DEMOLITION IS NOT TO BE REMOVED NOTIFY ARCHITECT OF ANY AND ALL SUCH DISCOVERIES IMMEDIATELY.

11. WHERE EXISTING WALL SUBSTRATES REMAIN AS BASE MATERIAL SURFACES FOR INSTALLATION OF NEW FINISHES, REMOVE PROJECTIONS, FILL VOIDS, SECURE OR REMOVE AND REPLACE ANY EXISTING LOOSE OR OTHERWISE UNSUITABLE SUBSTRATE MATERIALS AND ADD BLOCKING OR STRAPPING TO RECEIVE NEW MATERIALS AND FINISHES. STRIP EXISTING WALL FINISH MATERIAL TO EXPOSE SUBSTRATE WHERE NEEDED.

12. PATCH, REPAIR AND REFINISH ALL SURFACES TO MATCH AND ALIGN WITH EXISTING ADJACENT SURFACES SCHEDULED TO REMAIN, AND PREPARE TO RECEIVE NEW FINISHES SPECIFIED WORK SHALL INCLUDE ALL LABOR AND MATERIALS ON ALL SURFACES REQUIRED TO RENDER SUBSTRATES ACCEPTABLE TO RECEIVE NEW FINISHES SPECIFIED IN ACCORDANCE WITH MANUFACTURER'S WRITTEN RECOMMENDATIONS.

13. PROTECT FROM LOSS OR DAMAGE ALL ITEMS INTENDED FOR SALVAGE AND REUSE, OR SCHEDULED TO REMAIN.

14. REPLACE IN KIND ANY EXISTING CONSTRUCTION, OR ITEM INTENDED TO REMAIN, OR BE SALVAGED FOR REUSE, BUT DAMAGED OR LOST AS A RESULT OF THE WORK OF THIS CONTRACT.

15. REUSE OF SALVAGED MATERIALS NOT SPECIFICALLY SCHEDULED FOR REUSE, WILL BE AT THE SOLE DISCRETION OF THE OWNER. IN NO CASE SHALL SALVAGED MATERIAL BE INCORPORATED IN THE WORK THAT DOES NOT MEET MINIMUM REQUIREMENTS OF STATE AND LOCAL CODES AND REGULATIONS.

16. SCHEDULES OF ADDITIONAL ITEMS TO BE SALVAGED (IF ANY) ARE TO BE PROVIDED BY THE OWNER UPON REQUEST OF THE CONTRACTOR.

17. ITEMS TO BE SALVAGED BUT NOT SO SCHEDULED ON THE DEMOLITION PLAN SHALL BE CONFIRMED BY THE CONTRACTOR WITH THE OWNER. ALL ITEMS TO BE TURNED OVER TO THE OWNER, SHALL BE PROTECTED DURING DEMOLITION AND REMOVAL AND SHALL BE DELIVERED IN AN UNDAMAGED CONDITION.

18. REMOVE ALL DEMOLISHED MATERIALS NOT SCHEDULED FOR SALVAGE AND REUSE, OR THOSE TO BECOME PROPERTY OF THE OWNER, FROM THE SITE AND DISPOSE OF IN ACCORDANCE WITH LOCAL, STATE AND FEDERAL REGULATIONS.

19. TAKE CARE TO DISCONNECT ALL ELECTRICAL POWER TO ITEMS, AREAS, ELEMENTS INVOLVED IN THE DEMOLITION PRIOR TO DEMOLITION.

20. CONFINE TOOLS AND EQUIPMENT, STORAGE OF MATERIALS AND OPERATIONS TO LIMITS DESIGNATED BY THE BUILDING OWNER. THE PREMISES SHALL BE MAINTAINED IN SAFE, ORDERLY CONDITION AT ALL TIMES. REMOVE DEBRIS DAILY. COVER DUMPSTERS WITH FIRE RESISTANT COVERS SECURELY FASTENED TO PREVENT VANDALISM.

21. DEMOLITION PLANS SHALL BE USED IN CONJUNCTION WITH DRAWINGS FOR NEW CONSTRUCTION (EXTERIOR ELEVATIONS, DETAILS, ETC.) SO THAT EXACT LIMIT AND BOUNDARIES OF SPECIFIC DEMOLITION MAY BE DETERMINED.

22. ENSURE THAT ALL ELECTRICAL, MECHANICAL, FIRE PROTECTION, VOICE/DATA WIRING, AND PLUMBING SYSTEMS SERVING BASE BUILDING SYSTEMS WILL REMAIN OPERATIONAL DURING THE COURSE OF DEMOLITION. SURVEY THE SITE BEFORE STARTING WORK TO IDENTIFY LOCATIONS OF THESE SYSTEMS.

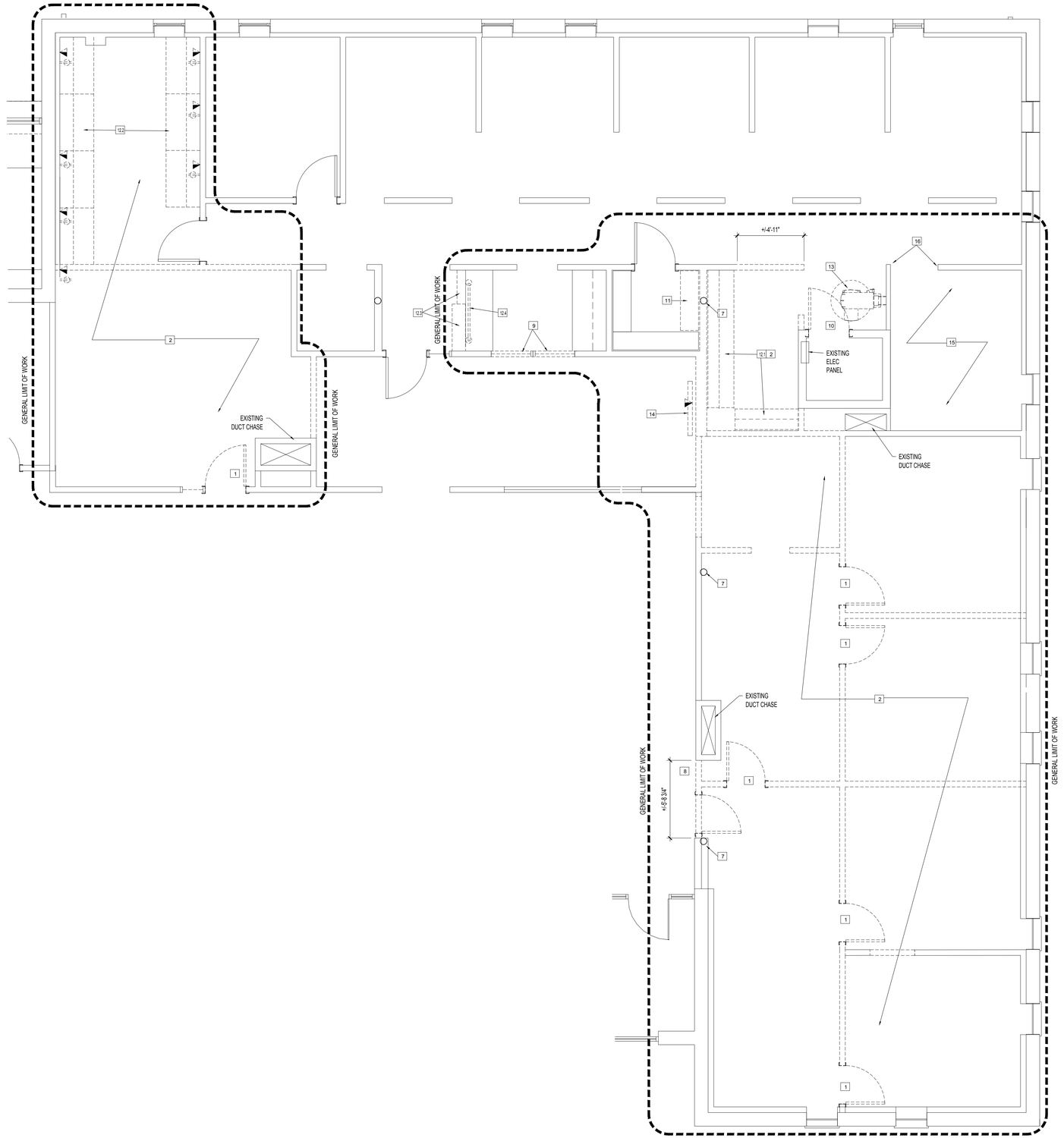

SECOND FLOOR DEMOLITON PLAN
1/8" = 1'-0"
NORTH
FIELD VERIFY ALL DIMENSIONS PRIOR TO CONSTRUCTION, AND NOTIFY ARCHITECT OF ANY MAJOR DISCREPANCIES

SECOND FLOOR DEMOLITION KEY NOTES

REFER TO GENERAL DEMOLITION NOTES FOR ADDITIONAL INFORMATION.

1. DEMOLISH EXISTING DOOR / FRAME
2. DEMOLISH EXISTING FLOOR FINISH. SCRAPE/SCARIFY CONCRETE SLAB. REMOVE EXISTING ADHESIVES/MORTAR FOR SMOOTH, CLEAN SURFACE AS REQUIRED TO RECEIVE NEW FLOORING PER NEW FLOOR MANUFACTURER'S PUBLISHED REQUIREMENTS.
3. DEMOLISH EXISTING CEILING SYSTEM, LIGHT FIXTURES, MECHANICAL DIFFUSERS, ETC..
4. DEMOLISH EXISTING STUD WALLS
5. SALVAGE EXISTING SS SINK AND FAUCETS FOR RE-USE
6. EXISTING COLUMNS - FIELD VERIFY LOCATION
7. CORE DRILL CONCRETE SLAB AT LOCATIONS OF NEW UTILITIES FOR DENTAL CHAIRS. SEE VENDOR'S EQUIPMENT FLOOR PLAN
8. PARTIALLY DEMOLISH EXISTING CORRIDOR WALL
9. DEMOLISH EXISTING RECEPTION WINDOW AND METAL FRAME.
10. SALVAGE EXISTING PUMP ROOM DOOR AND FRAME FOR RE-USE
11. SALVAGE EXISTING SHELVING AND BRACKET HARDWARE FOR RE-USE
12. DEMOLISH EXISTING MILLWORK:
    - 12.1. STERILIZATION MILLWORK, SINK, AND PLUMBING FIXTURES
    - 12.2. STAFF OFFICE MILLWORK.
    - 12.3. PARTIALLY DEMOLISH CHECKOUT COUNTER MILLWORK
    - 12.4. SALVAGE EXISTING SNEEZE GUARD FOR RE-USE
13. SALVAGE X-RAY MACHINE FOR RE-LOCATION
14. SALVAGE EXISTING TV FOR RE-USE
15. REMOVE EXISTING CEILING TILE IN EXISTING HYGIENIST ROOM. EXISTING GRID TO REMAIN. EXISTING EQUIPMENT AND FINISHES TO REMAIN IN THIS ROOM.
16. PREPARE OPENING TO RECEIVE NEW DOOR AND FRAME
17. SALVAGE EXISTING PENDANT LIGHT FIXTURES FOR RE-USE

KEY PLAN
SECOND FLOOR
NORTH

castellone architecture
792 great road
lincoln, ri 02865
401-465-9861

DRAWN BY: PAC
JUNE 12, 2026
REVISIONS:

DENTAL CLINIC 2ND FLOOR ALTERATIONS

TRI-COUNTY COMMUNITY ACTION AGENCY
1126 HARTFORD AVENUE
JOHNSTON, RI 02919

DEMOLITION PLAN, DEMOLITION NOTES

D1-1

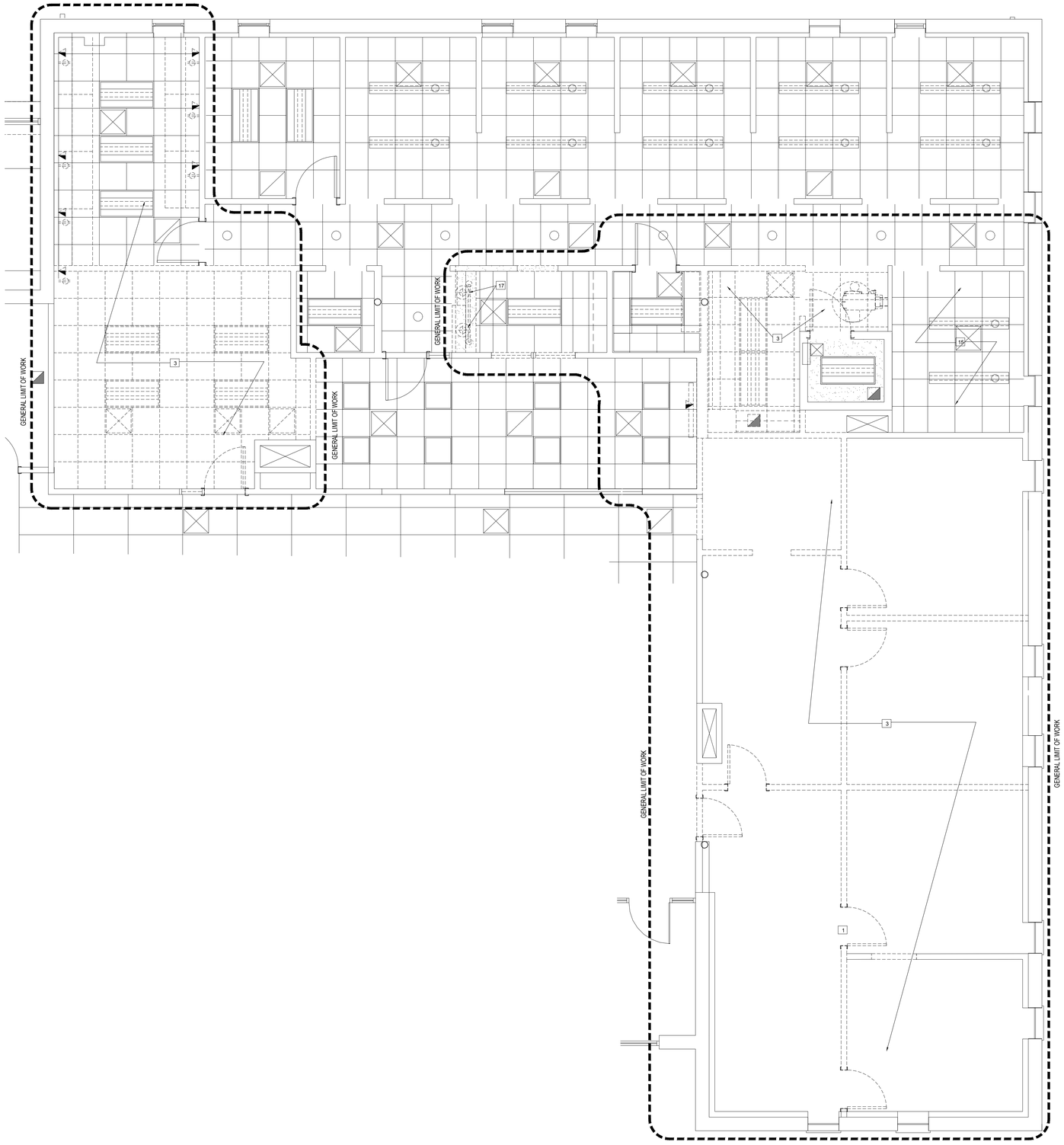

SECOND FLOOR CEILING DEMOLITON PLAN
1/8" = 1'-0"
NORTH

SECOND FLOOR DEMOLITION KEY NOTES

REFER TO GENERAL DEMOLITION NOTES FOR ADDITIONAL INFORMATION.

1. DEMOLISH EXISTING DOOR / FRAME
2. DEMOLISH EXISTING FLOOR FINISH. SCRAPE/SCARIFY CONCRETE SLAB. REMOVE EXISTING ADHESIVES/MORTAR FOR SMOOTH, CLEAN SURFACE AS REQUIRED TO RECEIVE NEW FLOORING PER NEW FLOOR MANUFACTURER'S PUBLISHED REQUIREMENTS.
3. DEMOLISH EXISTING CEILING SYSTEM, LIGHT FIXTURES, MECHANICAL DIFFUSERS, ETC..
4. DEMOLISH EXISTING STUD WALLS
5. SALVAGE EXISTING SS SINK AND FAUCETS FOR RE-USE
6. EXISTING COLUMNS - FIELD VERIFY LOCATION
7. CORE DRILL CONCRETE SLAB AT LOCATIONS OF NEW UTILITIES FOR DENTAL CHAIRS. SEE VENDOR'S EQUIPMENT FLOOR PLAN
8. PARTIALLY DEMOLISH EXISTING CORRIDOR WALL
9. DEMOLISH EXISTING RECEPTION WINDOW AND METAL FRAME.
10. SALVAGE EXISTING PUMP ROOM DOOR AND FRAME FOR RE-USE
11. SALVAGE EXISTING SHELVING AND BRACKET HARDWARE FOR RE-USE
12. DEMOLISH EXISTING MILLWORK:
    - 12.1. STERILIZATION MILLWORK, SINK, AND PLUMBING FIXTURES
    - 12.2. STAFF OFFICE MILLWORK.
    - 12.3. PARTIALLY DEMOLISH CHECKOUT COUNTER MILLWORK
    - 12.4. SALVAGE EXISTING SNEEZE GUARD FOR RE-USE
13. SALVAGE X-RAY MACHINE FOR RE-LOCATION
14. SALVAGE EXISTING TV FOR RE-USE
15. REMOVE EXISTING CEILING TILE IN EXISTING HYGIENIST ROOM. EXISTING GRID TO REMAIN. EXISTING EQUIPMENT AND FINISHES TO REMAIN IN THIS ROOM.
16. PREPARE OPENING TO RECEIVE NEW DOOR AND FRAME
17. SALVAGE EXISTING PENDANT LIGHT FIXTURES FOR RE-USE

KEY PLAN
SECOND FLOOR
NORTH

castellone architecture
792 great road
lincoln, ri 02865
401-465-9861

DRAWN BY: PAC
JUNE 12, 2026
REVISIONS:

DENTAL CLINIC 2ND FLOOR ALTERATIONS

TRI-COUNTY COMMUNITY ACTION AGENCY
1126 HARTFORD AVENUE
JOHNSTON, RI 02919

DEMOLITION REF
CELING PLAN

D1-2

NORTH

SECOND FLOOR PLAN - DENTAL SUITE

1/4" = 1'-0"

1. DIMENSIONS ARE FROM FACE OF EXISTING TO FACE OF NEW FINISH/SHEATHING.
2. REFER TO DRAWING T2 FOR WALL TYPES
3. REFER TO DENTAL EQUIPMENT VENDOR'S EQUIPMENT PLAN AND EQUIPMENT SPECIFICATIONS FOR BLOCKING AND UTILITY REQUIREMENTS

FLOOR PLAN KEY NOTES

UNLESS NOTED OTHERWISE, DIMENSIONS ARE FROM FACE OF EXISTING TO FACE OF FINISH GYPSUM

1. CENTER WALL ON EXISTING COLUMN. PAD WALL THICKNESS TO ENCLOSE COLUMN.
2. EXISTING DUCT CHASE. FIELD VERIFY LOCATION
3. STUD INFILL EXISTING OPENING. INSTALL SOUND ATTENUATION BATT BETWEEN STUDS.
4. CORE DRILL FLOOR SLAB AT LOCATIONS OF UTILITIES FOR DENTAL CHAIRS. VERIFY LOCATIONS WITH VENDOR FOR NEW EQUIPMENT SPECIFICATIONS. LOCATE EXISTING FLOOR JOISTS PRIOR TO DRILLING.
5. NOT USED
6. BUILT-UP SOUND REDUCTION FLOORING - SEE WALL TYPES.
7. VINYL CORNER GUARDS AT ALL OUTSIDE CORNERS. SELF-ADHESIVE - 2x2x48. CS ACROVYN # A231. VERIFY COLOR WITH OWNER PRIOR TO ORDER
8. INSTALL NESTED BLOCKING AT WALL-HUNG X-RAY UNITS. REFER TO VENDOR-PROVIDED TEMPLATE AND COORDINATE LOCATIONS WITH DENTAL EQUIPMENT VENDOR PRIOR TO INSTALLATION.
9. SALVAGED-SNEEZE GUARD. REVIEW LOCATION WITH OWNER PRIOR TO INSTALL

KEY PLAN
SECOND FLOOR

NORTH

castellone architecture
792 great road
lincoln, ri 02865
401-465-9861

DRAWN BY: PAC
JUNE 12, 2026
REVISIONS:

DENTAL CLINIC 2ND FLOOR ALTERATIONS

TRI-COUNTY COMMUNITY ACTION AGENCY
1126 HARTFORD AVENUE
JOHNSTON, RI 02919

FLOOR PLAN

A1-1

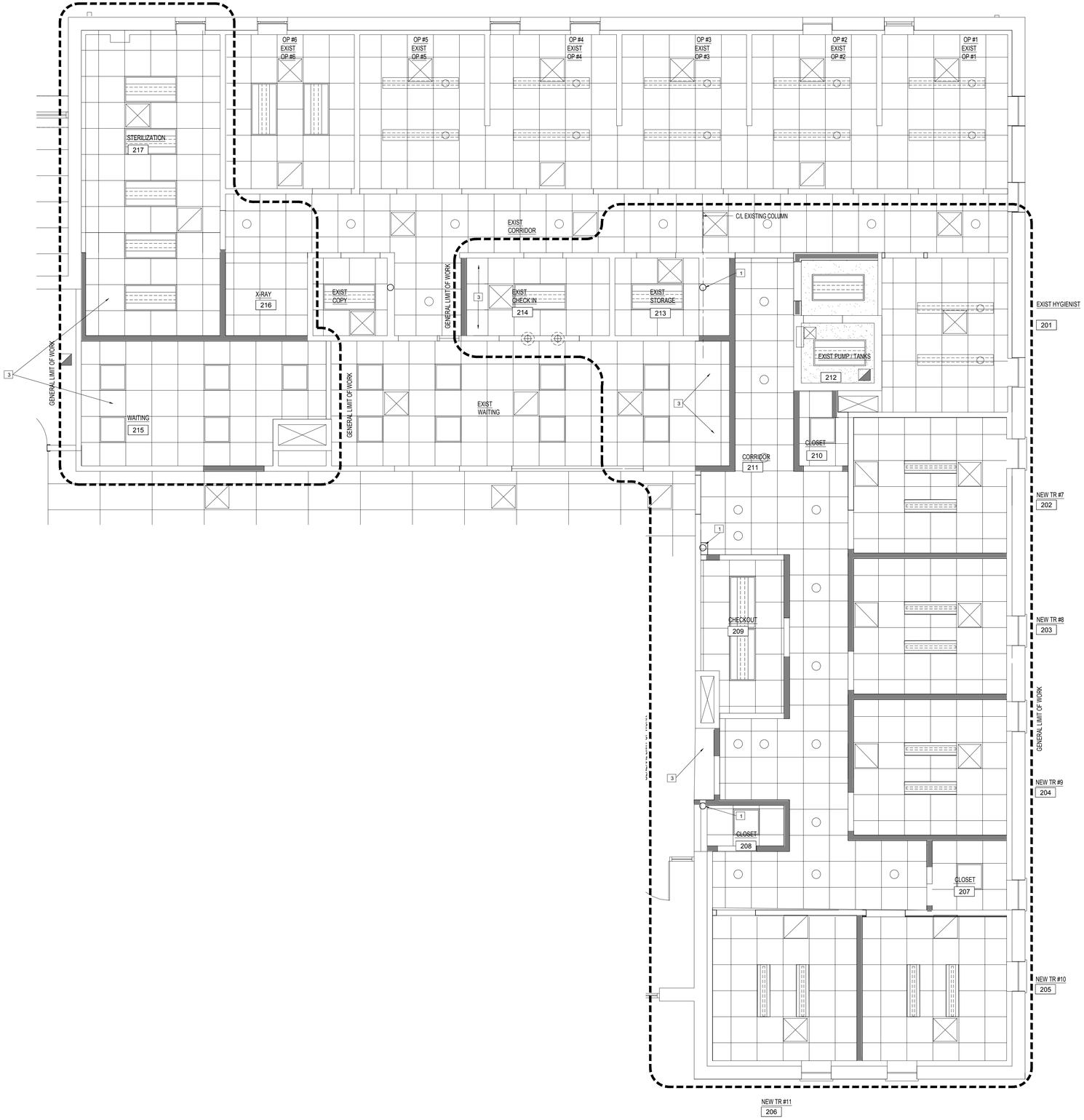

SECOND FLOOR PLAN - DENTAL SUITE

1/4" = 1'-0"

NORTH

1. DIMENSIONS ARE FROM FACE OF EXISTING TO FACE OF NEW FINISH/SHEATHING.
2. REFER TO DRAWING T2 FOR WALL TYPES

CEILING KEY NOTES

1. EXISTING COLUMN - VERIFY LOCATION
2. NEW GYPSUM BOARD SOFFIT INSTALLED 7'-0" A.F.F UNLESS NOTED OTHERWISE.
3. NEW CEILING GRID-TILE. MATCH EXISTING STYLE AND HEIGHT

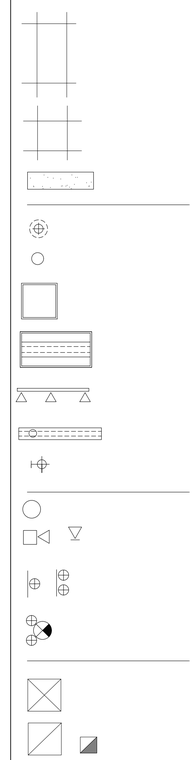

KEY PLAN

SECOND FLOOR

NORTH

castellone
architecture
792 great road
lincoln, ri 02865
401-465-9861

DRAWN BY: PAC
JUNE 12, 2026
REVISIONS:

DENTAL CLINIC 2ND FLOOR ALTERATIONS

TRI-COUNTY COMMUNITY ACTION AGENCY
1126 HARTFORD AVENUE
JOHNSTON, RI 02919

REFLECTED CEILING PLAN

A1-3

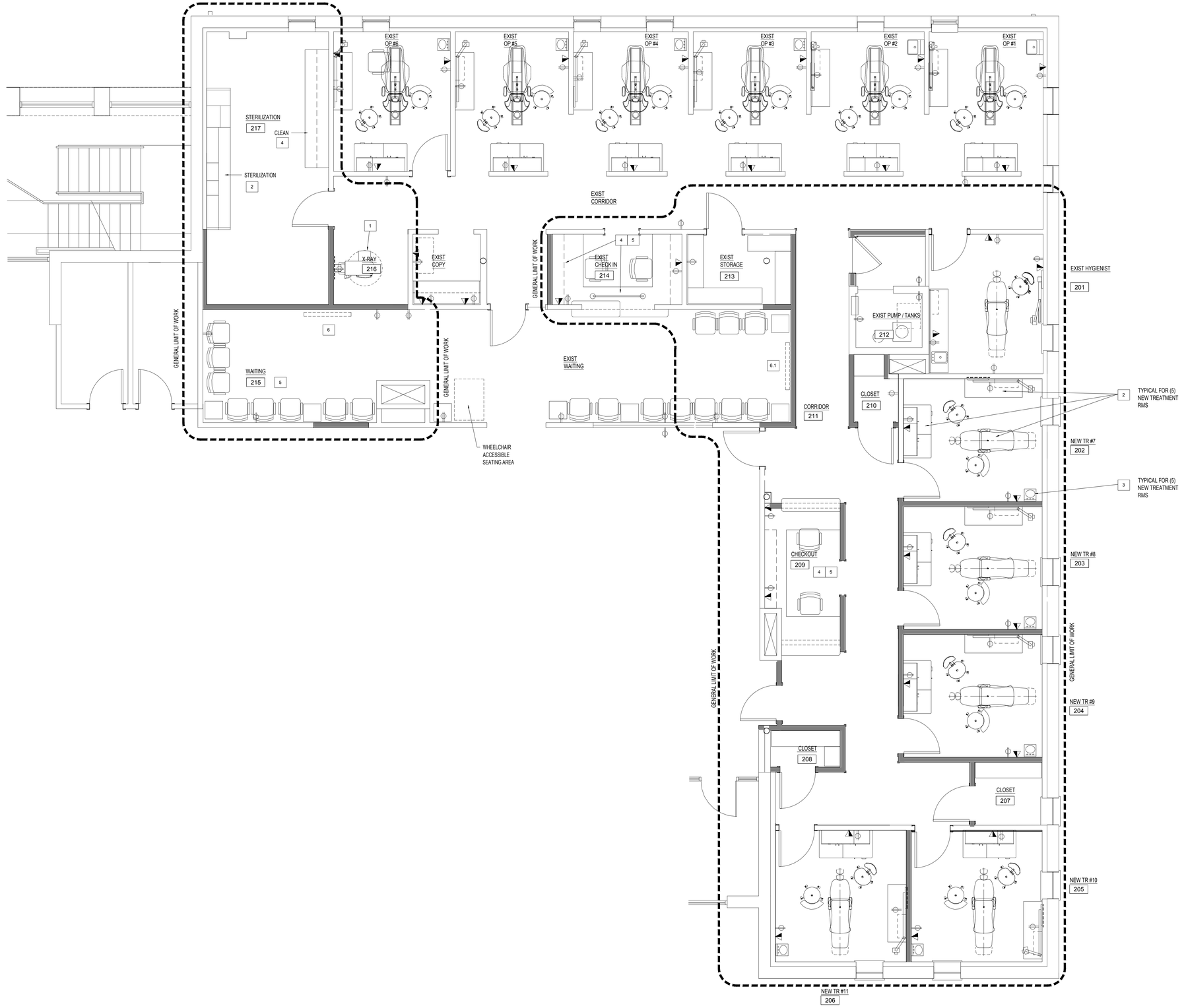

FURNITURE & EQUIPMENT PLAN
1/4" = 1'-0"
NORTH
FOR DENTAL EQUIPMENT AND MILLWORK, VENDOR'S DENTAL EQUIPMENT PLAN

FURNITURE PLAN KEYNOTES

1. RE-INSTALL SALVAGED X-RAY MACHINE. PROVIDE NESTED BLOCKING IN WALL PER DENTAL EQUIPMENT REQUIREMENTS. COORDINATE WITH DENTAL EQUIPMENT VENDOR.
2. DENTAL EQUIPMENT AND MILLWORK BY VENDOR
3. HANDWASH SINKS BY VENDOR. FINAL CONNECTIONS BY CONTRACTOR
4. MILLWORK BY CONTRACTOR
5. FURNITURE BY OWNER
6. NEW TV/BRACKET FURNISHED BY OWNER, INSTALLED BY CONTRACTOR

6.1. EXISTING TV RELOCATED AND INSTALLED BY CONTRACTOR

LEGEND

PHONE / DATA - REFER TO ELEC (SHOWN FOR REFERENCE ONLY)

DUPLEX OUTLET - REFER TO ELEC (SHOWN FOR REFERENCE ONLY)

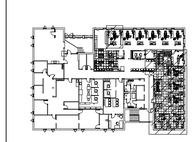

KEY PLAN
SECOND FLOOR
NORTH

castellone architecture
792 great road
lincoln, ri 02865
401-465-9861

DRAWN BY: PAC
JUNE 12, 2026
REVISIONS:

DENTAL CLINIC 2ND FLOOR ALTERATIONS

TRI-COUNTY COMMUNITY ACTION AGENCY
1126 HARTFORD AVENUE
JOHNSTON, RI 02919

FURNITURE & EQUIPMENT PLAN

A1-3

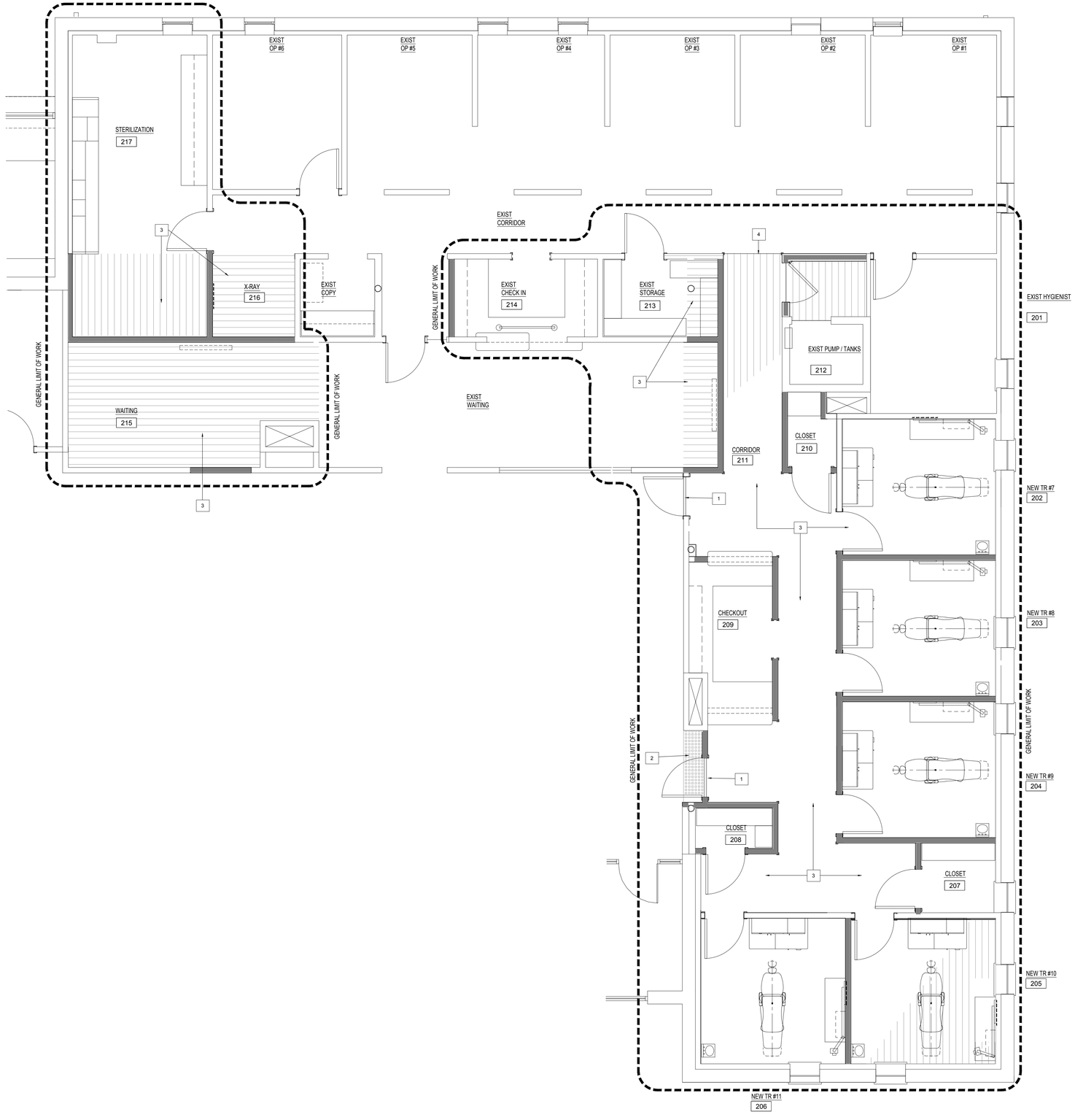

FURNITURE, EQUIPMENT, & FINISH PLAN
1/4" = 1'-0"

FLOOR FINISH KEYNOTES

1. VINYL TRANSITION STRIP- CARPET / VINYL. ROPPE #177. COLOR-BLACK.
2. CARPET TILE INFILL - MATCH EXISTING SHAW CARPET TILE.
3. NEW LVT VINYL PLANK FLOOR.
   3.1. MATCH EXISTING
   3.2. WITH 4" VINYL BASE TO MATCH EXISTING VINYL BASE
4. VINYL TO VINYL TRANSITION STRIP - MATCH EXISTING LVT

LEGEND

PHONE / DATA - REFER TO ELEC (SHOWN FOR REFERENCE ONLY)

DUPLEX OUTLET - REFER TO ELEC (SHOWN FOR REFERENCE ONLY)

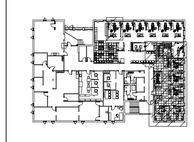

KEY PLAN
SECOND FLOOR

castellone architecture
792 great road
lincoln, ri 02865
401-465-9861

DRAWN BY: PAC
JUNE 12, 2026
REVISIONS:

DENTAL CLINIC 2ND FLOOR ALTERATIONS

TRI-COUNTY COMMUNITY ACTION AGENCY
1126 HARTFORD AVENUE
JOHNSTON, RI 02919

FLOOR FINISH PLAN

A1-4

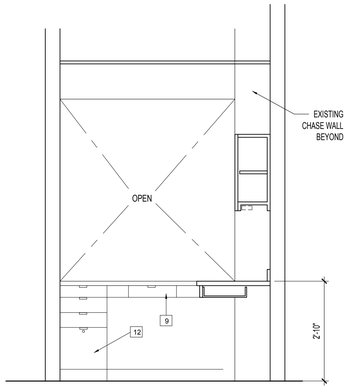

ELEVATION -D

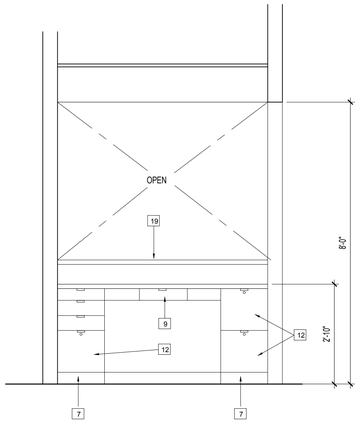

ELEVATION -C

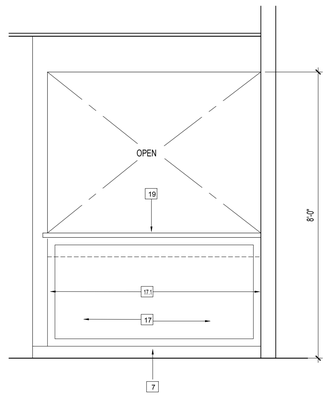

ELEVATION - B

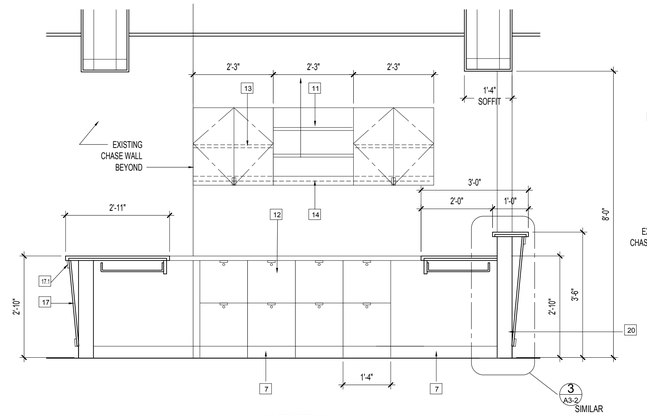

SECTION - A

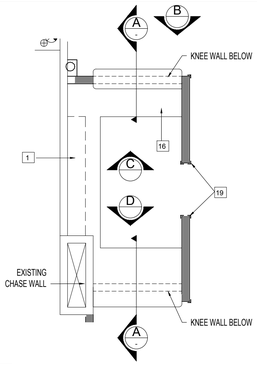

PLAN
1/4 = 1'-0"

MW1 / - CHECK-OUT
1/2" = 1'-0"

MILLWORK KEY NOTES

REFER TO DRAWING T-2 FOR GENERAL MILLWORK NOTES

1. UPPER CABINET
2. BASE CABINET
3. 5- TIER PLAM ADJUSTABLE SHELVING / EXTRA- DUTY BRACKETS AND STANDARDS - K&V 85 / 185 SERIES.
4. ALIGN
5. FILLER PANEL
6. 4" BACK SPLASH
7. VINYL BASE
8. REFRIGERATOR BY OWNER
9. DRAWERS
10. EQUIPMENT/MILLWORK BY DENTAL VENDOR - VERIFY UTILITY REQUIREMENTS. COORDINATE WITH VENDOR TO PROVIDE NESTING BLOCKING IN WALLS FOR WALL-MOUNTED EQUIPMENT AND MILLWORK.
11. OPEN ADJUSTABLE SHELVING
12. FILE CABINET DRAWERS/HARDWARE, INCLUDING CAM LOCKS
13. INTERIOR ADJUSTABLE SHELVING, PLAM FINISH
14. UNDER CABINET LED LIGHTING
15. NESTED FRPT WD OR METAL BLOCKING
16. SOLID SURFACE COUNTERTOP - EASED EDGES.
17. VENEER PLYWOOD PANEL
    17.1. PERIMETER 1X3 WOOD TRIM - MATCH PLYWOOD VENEER SPECIES
18. STEEL COUNTER BRACKET - BLACK FINISH
19. 2x2x48 VINYL CORNER GUARD - TYPICAL AT ALL OUTSIDE CORNERS
20. SALVAGED LIGHT FIXTURE

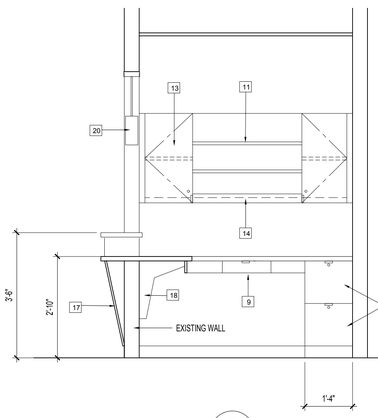

C / -

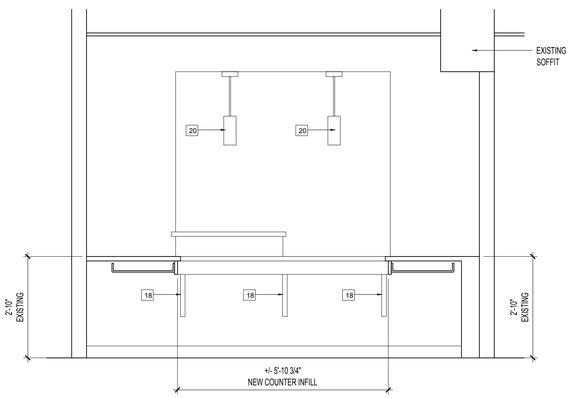

B / -

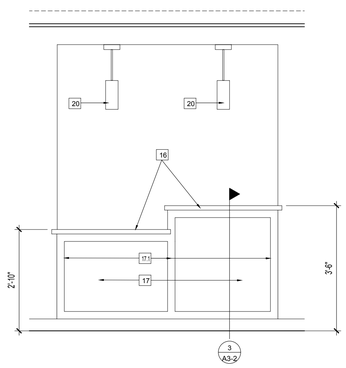

A / - WAITING ELEVATION
1/2" = 1'-0"

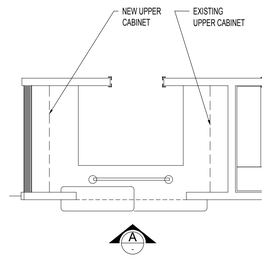

PLAN
1/4 = 1'-0"

MW2 / - CHECK-IN

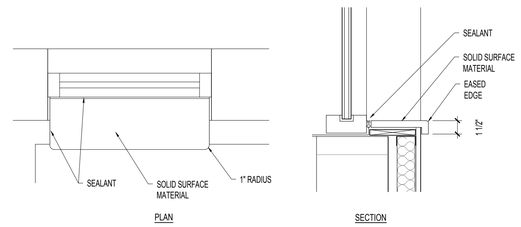

6 / A3-1 WINDOW SILL
1" = 1'-0"

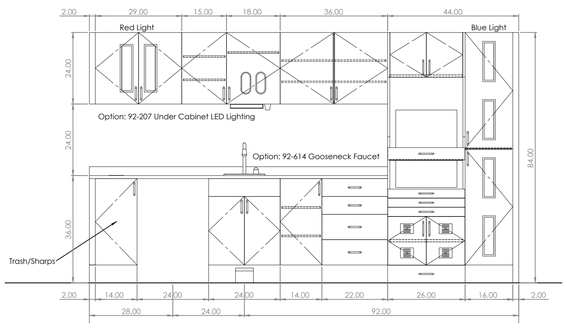

ELEVATION -C

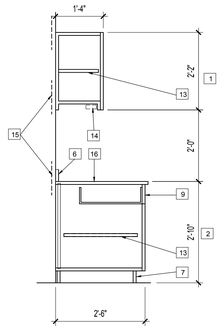

SECTION - B

SEE DETAIL 4/A3-2 FOR ADDITIONAL INFORMATION

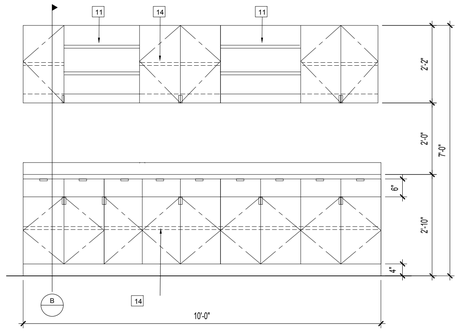

ELEVATION - A

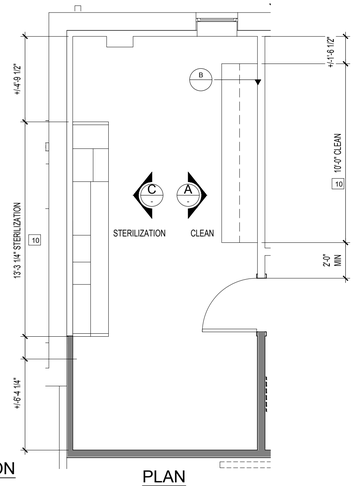

PLAN

MW4 / - STERILIZATION
1/2" = 1'-0"

STERILIZATION MILLWORK SHOWN FOR REFERENCE ONLY. REFER TO DENTAL EQUIPMENT VENDOR'S DETAILED MILLWORK DRAWINGS AND INSTALLATION REQUIREMENTS

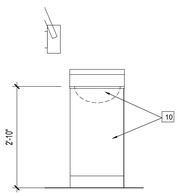

ELEVATION - A

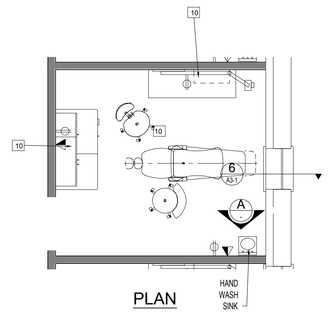

PLAN

MW3 / - TYPICAL DENTAL STATION
1/2" = 1'-0"

STERILIZATION MILLWORK SHOWN FOR REFERENCE ONLY. REFER TO DENTAL EQUIPMENT VENDOR'S DETAILED MILLWORK DRAWINGS AND INSTALLATION REQUIREMENTS

castellone architecture
792 great road
lincoln, ri 02865
401-465-9861

DRAWN BY: PAC
JUNE 12, 2026
REVISIONS:

DENTAL CLINIC 2ND FLOOR ALTERATIONS

TRI-COUNTY COMMUNITY ACTION AGENCY
1126 HARTFORD AVENUE
JOHNSTON, RI 02919

DETAILS

A3-1

MILLWORK KEY NOTES

REFER TO DRAWING T-2 FOR GENERAL MILLWORK NOTES

1. UPPER CABINET
2. BASE CABINET
3. 5- TIER PLAM ADJUSTABLE SHELVING / EXTRA- DUTY BRACKETS AND STANDARDS - K&V 85 / 185 SERIES.
4. ALIGN
5. FILLER PANEL
6. 4" BACK SPLASH
7. VINYL BASE
8. REFRIGERATOR BY OWNER
9. DRAWERS
10. EQUIPMENT/MILLWORK BY DENTAL VENDOR - VERIFY UTILITY REQUIREMENTS. COORDINATE WITH VENDOR TO PROVIDE NESTING BLOCKING IN WALLS FOR WALL-MOUNTED EQUIPMENT AND MILLWORK.
11. OPEN ADJUSTABLE SHELVING
12. FILE CABINET DRAWERS/HARDWARE, INCLUDING CAM LOCKS
13. INTERIOR ADJUSTABLE SHELVING, PLAM FINISH
14. UNDER CABINET LED LIGHTING
15. NESTED FRPT WD OR METAL BLOCKING
16. SOLID SURFACE COUNTERTOP - EASED EDGES.
17. VENEER PLYWOOD PANEL
    17.1. PERIMETER 1X3 WOOD TRIM - MATCH PLYWOOD VENEER SPECIES
18. STEEL COUNTER BRACKET - BLACK FINISH
19. 2x2x48 VINYL CORNER GUARD - TYPICAL AT ALL OUTSIDE CORNERS
20. SALVAGED LIGHT FIXTURE

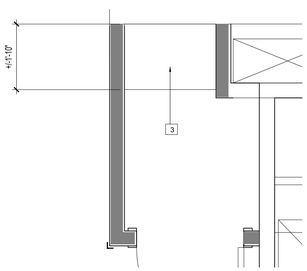

PLAN 210

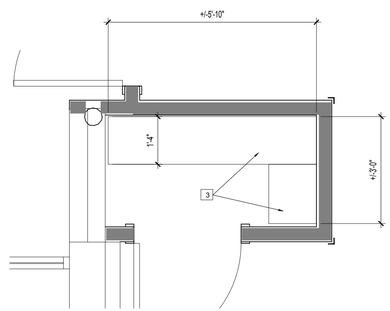

PLAN 208

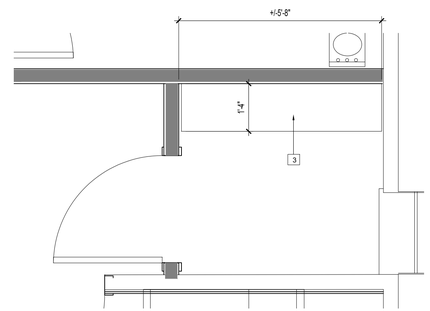

PLAN 207

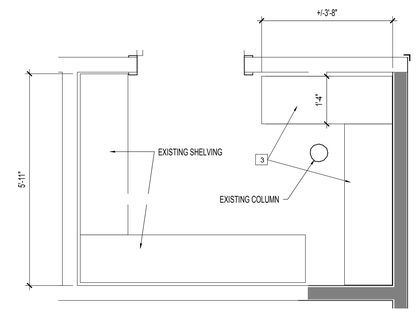

PLAN 213

MW5 / -

STORAGE SHELVING
1/2" = 1'-0"

FIELD VERIFY CLEAR DIMENSIONS PRIOR TO FABRICATION

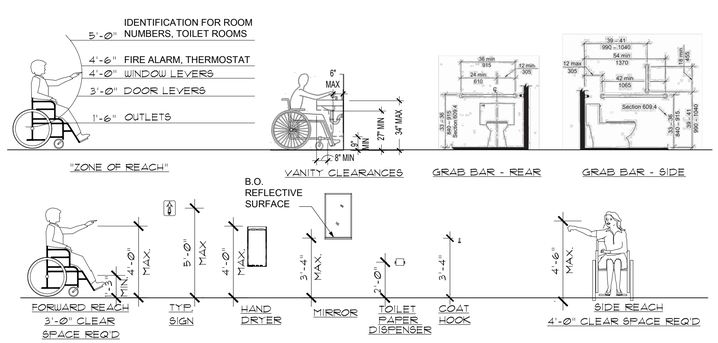

7 / -

ACCESSORY & FIXTURE MOUNTING HEIGHTS

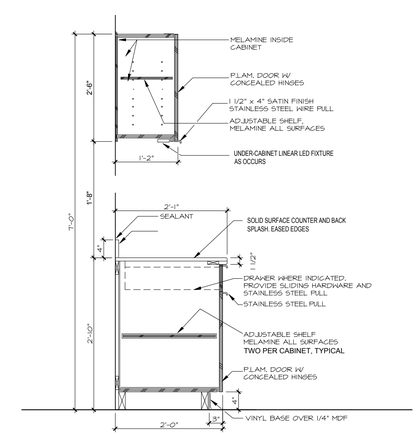

4 / -

CABINETS
1/4" = 1'-0"

1. CABINET CONFIGURATIONS AND DIMENSIONS MAY VARY BY SPECIFIC MILLWORK.
2. REFER TO MILLWORK NOTES ON T2 FOR ADDITIONAL INFORMATION

castellone architecture
792 great road
lincoln, ri 02865
401-465-9861

DRAWN BY: PAC
JUNE 12, 2026
REVISIONS:

DENTAL CLINIC 2ND FLOOR ALTERATIONS

TRI-COUNTY COMMUNITY ACTION AGENCY
1126 HARTFORD AVENUE
JOHNSTON, RI 02919

DETAILS

A3-2

DOOR & FRAME SCHEDULE

NO.	DOOR						FRAME					HDWRE SET	DETAILS	REMARKS
	TYP	SIZE	MAT	LABEL	FINISH		TYP	MAT.	LABEL	FINISH				
					PUSH	PULL				PUSH	PULL			
201	B	3 X 7	WD				A1	HM		P-3	P-3	HW-2		HYGIENIST (NEGATIVE PRESSURE)
202	A	3 X 7	WD				A	HM		P-3	P-3	HW-1		TREATMENT RM
203	A	3 X 7	WD				A	HM		P-3	P-3	HW-1		TREATMENT RM
204	A	3 X 7	WD				A	HM		P-3	P-3	HW-1		TREATMENT RM
205	B	3 X 7	WD				A1	HM		P-3	P-3	HW-2		TREATMENT RM (NEGATOVE PRESSURE)
206	A	3 X 7	WD				A	HM		P-3	P-3	HW-1		TREATMENT RM
207	A	3 X 7	WD				A	HM		P-3	P-3	HW-4		CLOSET
208	A	3 X 7	WD				A	HM		P-3	P-3	HW-4		CLOSET
209														NOT USED
210	A	3 X 7	WD				A	HM		P-3	P-3	HW-4		CLOSET
211A	B	3 X 7	WD				A	HM		P-3	P-3	HW-3		CORRIDOR
211B	B	3 X 7	WD				A	HM		P-3	P-3	HW-3		CORRIDOR
212	EX	3 X 7	WD				EX				EX	EX		SALVAGED EXISTING PUMP ROOM

DOOR / FRAME NOTES:
1. SUBMIT PRODUCT DATA / SHOP DRAWINGS, AND FINISH SAMPLES TO ARCHITECT FOR REVIEW AND APPROVAL
2. INTERIOR DOOR FRAMES TO BE KNOCK-DOWN HOLLOW METAL, FACTORY PRIMED WITH MITRED CORNERS.
3. FLUSH WOOD DOORS BASED ON LAMBTON STANDARD SERIES, PARTICALBOARD CORE DOOR "5PC-ME". PLAIN SLICED VENEER, FACTORY FINISHED. MATCH EXISTING DOOR FINISH
4. WHERE INDICATED, PROVIDE FRAMES TO RECEIVE ELECTRIC STRIKES

HARDWARE SCHEDULE

SET NO.	DOORS	HARDWARE
HW-1	TREATMENT ROOMS	• 1-1 / 2 PR. BB HINGES • 1 LOCKSET (PRIVACY FUNCTION) • 1 WALL / FLOOR STOP • 3 SILENCERS • CLOSER (PUSH SIDE)
HW-2	NEGATIVE PRESSURE ROOMS	• 1-1 / 2 PR. BB HINGES • 1 LOCKSET (PRIVACY FUNCTION) • 1 WALL / FLOOR STOP • DOOR SWEEP • WEATHERSTRIP • 3 SILENCERS
HW-3	CORRIDOR DOORS	• 1-1 / 2 PR. BB HINGES • 1 LOCKSET (OFFICE FUNCTION) • 1 CLOSER • PUSH / PULL • 1 WALL / FLOOR STOP • 3 SILENCERS
HW-4	STORAGE ROOMS	• 1-1 / 2 PR. BB HINGES • STOREROOM LOCKSET • 1 WALL STOP • 1 CLOSER (PUSH SIDE) • 3 SILENCERS

DOOR HARDWARE NOTES
1. FINISH TO BE US26D (BRUSHED CHROME).
2. DOOR HARDWARE TO BE U.L. FIRE-RATED WHEN USED IN A FIRE-RATED ASSEMBLY.
3. LOCKSETS TO BE "PDQ" SP PHL LEVER SERIES GRADE 2, MASTER KEYED PER OWNER'S REQUIREMENTS. SUBMIT KEYING SCHEDULE TO OWNER FOR REVIEW AND APPROVAL PRIOR TO ORDERING.
4. ALL DOOR HARDWARE TO BE LEVER TYPE, ADA / ANSI A117.1 COMPLIANT.
5. SUBMIT PRODUCT DATA TO ARCHITECT FOR REVIEW PRIOR TO ORDER.

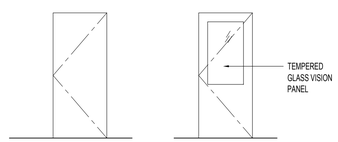

SOLID CORE WOOD

A

B

DOOR TYPES
1/4" = 1'-0"

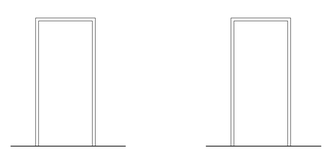

HOLLOW METAL KNOCK-DOWN

A1

HOLLOW METAL
KNOCK-DOWN - KERFED TO RECEIVE WEATHER STRIP-
ASSA-ABLOY "CURRASEAL" OR EQUAL

A2

FRAME TYPES
1/4" = 1'-0"

castellone architecture
792 great road
lincoln, ri 02865
401-465-9861

DRAWN BY: PAC
JUNE 12, 2026
REVISIONS:

DENTAL CLINIC 2ND FLOOR ALTERATIONS

TRI-COUNTY COMMUNITY ACTION AGENCY
1126 HARTFORD AVENUE
JOHNSTON, RI 02919

DOOR / HDWRE SCHEDULES, DETAILS

A4-1

PAINTING NOTES

1. SUBMITTALS
PRODUCT DATA: PROVIDE A COMPLETE LIST OF ALL PRODUCTS TO BE USED, WITH THE FOLLOWING INFORMATION FOR EACH:
MANUFACTURER'S NAME, PRODUCT NAME AND/OR CATALOG NUMBER, AND GENERAL PRODUCT CATEGORY.
MANUFACTURER'S INSTRUCTIONS: INDICATE SPECIAL SURFACE PREPARATION PROCEDURES.
MAINTENANCE DATA: SUBMIT DATA ON CLEANING, TOUCH-UP, AND REPAIR OF PAINTED AND COATED SURFACES.
SAMPLES: SUBMIT THREE PAPER SAMPLES, 5 INCHES BY 7 INCHES (127MM X 178MM) IN SIZE, ILLUSTRATING SELECTED COLORS FOR EACH COLOR AND SYSTEM SELECTED WITH SPECIFIED COATS CASCADED.

2. MANUFACTURER QUALIFICATIONS: A SINGLE MANUFACTURER WITH A MINIMUM OF TEN (10) YEARS EXPERIENCE WILL SUPPLY ALL PRIMARY PRODUCTS SPECIFIED IN THIS SECTION. ACCEPTABLE MANUFACTURERS: BENJAMIN MOORE & CO., SHERWIN WILLIAMS, PRATT & LAMBERT, OR APPROVED EQUAL.

3. MAINTAIN ENVIRONMENTAL CONDITIONS (TEMPERATURE, HUMIDITY, AND VENTILATION) WITHIN LIMITS RECOMMENDED BY MANUFACTURER FOR OPTIMUM RESULTS. DO NOT INSTALL PRODUCTS UNDER ENVIRONMENTAL CONDITIONS OUTSIDE MANUFACTURER'S ABSOLUTE LIMITS.

4. AT PROJECT CLOSEOUT, PROVIDE TO THE OWNER OR OWNER'S REPRESENTATIVE AN EXECUTED COPY OF THE MANUFACTURER'S STANDARD FORM OUTLINING THE TERMS AND CONDITIONS OF AND ANY EXCLUSIONS TO THEIR LIMITED WARRANTY AGAINST INSTALLATION AND/OR PRODUCT DEFECT.

5. AT PROJECT CLOSEOUT, PROVIDE THE COLOR MIXTURE NAME AND CODE TO THE OWNER OR OWNER'S REPRESENTATIVE FOR ACCURATE FUTURE COLOR MATCHING.

6. VOLATILE ORGANIC COMPOUND (VOC) CONTENT: ALL PAINTS AND COATINGS USED MUST MEET THE VOC LIMITS OF GREEN SEAL STANDARD GS-11:
INTERIOR: 50 G/L VOC OR LESS FOR FLATS AND 150 G/L VOC FOR NON FLATS..

7. PROVIDE MATERIALS THAT ARE COMPATIBLE WITH ONE ANOTHER AND THE SUBSTRATES INDICATED UNDER CONDITIONS OF SERVICE AND APPLICATION, AS DEMONSTRATED BY MANUFACTURER BASED ON TESTING AND FIELD EXPERIENCE.

8. THE FOLLOWING TERMS ARE USED TO DESCRIBE SHEENS OR GLOSSES, AS MEASURED BY A GLOSS METER FROM A 60 DEGREE ANGLE FROM VERTICAL, AS A PERCENTAGE OF THE AMOUNT OF LIGHT THAT IS REFLECTED:
FLAT - LESS THAN 5 UNITS.
MATTE - 0 - 10 UNITS.
EGGSHELL - 10 - 25 UNITS.
SATIN / SOFT / MEDIUM-GLOSS - 20 - 35 UNITS.
SEMI-GLOSS - 35 - 70 UNITS.
GLOSS - 70 - 85 UNITS.

9. MIXING AND TINTING: EXCEPT WHERE SPECIFICALLY NOTED IN THIS SECTION, ALL PAINT SHALL BE READY-MIXED AND PRE-TINTED. AGITATE ALL PAINT PRIOR TO AND DURING APPLICATION TO ENSURE UNIFORM COLOR, GLOSS, AND CONSISTENCY. THINNER ADDITION SHALL NOT EXCEED MANUFACTURER'S PRINTED RECOMMENDATIONS. DO NOT USE KEROSENE OR OTHER ORGANIC SOLVENTS TO THIN WATER-BASED PAINTS. WHERE PAINT IS TO BE SPRAYED, THIN ACCORDING TO MANUFACTURER'S CURRENT GUIDELINES.

10. PAINT SYSTEMS:
INTERIOR PRIMERS -
WOOD: ONE (1) COAT - INTERIOR LATEX ACRYLIC PRIMER
FERROUS METALS: ONE (1) COAT - ACRYLIC METAL PRIMER
GYPSUM BOARD, PLASTER: ONE (1) COAT - ALL PURPOSE ACRYLIC PRIMER SEALER
EXTERIOR FINISH COATS
FLAT FINISH: TWO (2) COATS - ACRYLIC FLAT LATEX HOUSE PAINT
SATIN / SOFT / MEDIUM-GLOSS FINISH: TWO (2) COATS - SOFT GLOSS LATEX HOUSE & TRIM PAINT
SEMI-GLOSS FINISH: TWO (2) COATS - ACRYLIC LATEX SEMI - GLOSS
HIGH GLOSS FINISH: TWO (2) COATS - LATEX HIGH GLOSS METAL & WOOD ENAMEL

INTERIOR FINISH COATS
FLAT FINISH: TWO (2) COATS - INTERIOR FLAT FINISH
EGGSHELL FINISH: TWO (2) COATS -INTERIOR EGGSHELL FINISH
SATIN/SEMI-GLOSS FINISH: TWO (2) COATS -INTERIOR SEMI-GLOSS FINISH
HIGH GLOSS FINISH: TWO (2) COATS - INTERIOR ACRYLIC GLOSS ENAMEL

11. PREPARATION: CLEAN SURFACES THOROUGHLY PRIOR TO COATING APPLICATION. DO NOT START WORK UNTIL SURFACES TO BE FINISHED ARE IN PROPER CONDITION TO PRODUCE FINISHED SURFACES OF UNIFORM, SATISFACTORY APPEARANCE. STAINS AND MARKS: REMOVE COMPLETELY, IF POSSIBLE, USING MATERIALS AND METHODS RECOMMENDED BY COATING MANUFACTURER. COVER STAINS AND MARKS WHICH CANNOT BE COMPLETELY REMOVED WITH ISOLATING PRIMER OR SEALER RECOMMENDED BY COATING MANUFACTURER TO PREVENT BLEED-THROUGH.REMOVE MILDEW, ALGAE, AND FUNGUS USING MATERIALS AND METHODS RECOMMENDED BY COATING MANUFACTURER.REMOVE DUST AND LOOSE PARTICULATE MATTER FROM SURFACES TO RECEIVE COATINGS IMMEDIATELY PRIOR TO COATING APPLICATION. PROTECT ADJACENT SURFACES NOT INDICATED TO RECEIVE COATINGS. PREPARE SURFACES IN ACCORDANCE WITH MANUFACTURER'S INSTRUCTIONS FOR SPECIFIED COATINGS AND INDICATED MATERIALS, USING ONLY METHODS AND MATERIALS RECOMMENDED BY COATING MANUFACTURER.
GYPSUM BOARD: REPAIR CRACKS, HOLES AND OTHER SURFACE DEFECTS WITH JOINT COMPOUND TO PRODUCE SURFACE FLUSH WITH ADJACENT SURFACES.
METALS - ALUMINUM, MILL-FINISH: CLEAN AND ETCH SURFACES WITH A PHOSPHORIC ACID-WATER SOLUTION OR WATER BASED INDUSTRIAL CLEANER. FLUSH WITH CLEAN WATER AND ALLOW TO DRY, BEFORE APPLYING PRIMER COAT.
FERROUS, SHOP-PRIMED: REMOVE LOOSE PRIMER AND RUST, IF PRESENT, BY SCRAPING AND SANDING, FEATHERING EDGES OF CLEANED AREAS TO PRODUCE UNIFORM FLAT SURFACE; SOLVENT-CLEAN SURFACES AND SPOT-PRIME BARE METAL WITH SPECIFIED PRIMER, FEATHERING EDGES TO PRODUCE UNIFORM FLAT SURFACE.
GALVANIZED STEEL, PASSIVATED: CLEAN WITH WATER-BASED INDUSTRIAL STRENGTH CLEANER. AFTER THE SURFACE HAS BEEN PREPARED, APPLY RECOMMENDED PRIMER TO A SMALL AREA. ALLOW PRIMER TO CURE FOR 7 DAYS, AND TEST ADHESION USING THE "CROSS-HATCH ADHESION TAPE TEST" METHOD IN ACCORDANCE WITH ASTM D 3359. IF THE ADHESION OF THE PRIMER IS POSITIVE, PROCEED WITH A RECOMMENDED COATING SYSTEM FOR GALVANIZED METAL.
STAINLESS STEEL: CLEAN SURFACES WITH PRESSURIZED STEAM, PRESSURIZED WATER, OR WATER-BASED INDUSTRIAL CLEANER.
POLYVINYL CHLORIDE (PVC) PIPE: REMOVE CONTAMINANTS AND MARKINGS WITH DENATURED ALCOHOL SCUFF SAND AND WIPE WITH SOLVENT FOR MAXIMUM ADHESION. TEST ADHESION BEFORE STARTING THE JOB.

12. WOOD:
SEAL KNOTS, PITCH STREAKS, AND SAP AREAS WITH SEALER RECOMMENDED BY COATING MANUFACTURER; FILL NAIL RECESSES AND CRACKS WITH FILLER RECOMMENDED BY COATING MANUFACTURER; SAND SURFACES SMOOTH. APPLY PRIMER COAT TO BACK OF WOOD TRIM AND PANELING.

13. RE-PREPARE AND RE-COAT UNSATISFACTORY FINISHES; REFINISH ENTIRE AREA TO CORNERS OR OTHER NATURAL TERMINATIONS. REPAIR TO ARCHITECT'S ACCEPTANCE COATINGS DAMAGED BY SUBSEQUENT CONSTRUCTION ACTIVITIES. WHERE REPAIRS CANNOT BE MADE TO ARCHITECT'S ACCEPTANCE, RE-APPLY FINISH COATING TO NEAREST ADJACENT CHANGE OF SURFACE PLANE, IN BOTH HORIZONTAL AND VERTICAL DIRECTIONS.

FINISH NOTES

1. PROVIDE PRIMERS AND UNDERCOATS BY THE SAME MANUFACTURER OF THE FINISH COAT. USE ONLY THINNERS APPROVED BY THE PAINT MANUFACTURER. USE ONLY WITHIN RECOMMENDED LIMITS.
2. ALL FINISHES SHALL BE INSTALLED IN STRICT ACCORDANCE WITH MANUFACTURER'S WRITTEN INSTRUCTIONS.
3. PROVIDE VINYL COVE BASE AT VINYL TILE FLOORS. PROVIDE VINYL STRAIGHT BASE AT CARPETED FLOORS.
4. PROVIDE TRANSITION STRIPS AT JUNCTION/TRANSITION OF DISSIMILAR FLOORING MATERIALS. IF NOT NOTED OTHERWISE, PROVIDE VINYL STRIPS AT JUNCTIONS OF VINYL AND CARPET. PROVIDE METAL TRANSITION STRIPS AT JUNCTION OF TILE FLOORS AND CARPET. ACCEPTED MANUFACTURER: SCHLUTER OR APPROVED EQUAL.
5. PRIOR TO APPLICATION OF VINYL WALL COVERING, PREPARE NEW GYPSUM BOARD SUBSTRATE WITH LATEX PRIMER APPROVED BY WALL COVERING MANUFACTURER.
6. PROVIDE SEALANT AT LOCATIONS INDICATED IN "GENERAL NOTES", SHEET T-2
7. CERAMIC TILE SHALL BE THINSET WITH UNSANDED GROUT. PREPARE CONCRETE SUBSTRATE IN ACCORDANCE WITH TILE MORTAR/ADHESIVE MANUFACTURER'S PUBLISHED INSTRUCTIONS.
8. SUBMIT ONE (1) SAMPLE AND TWO (2) COPIES OF PRODUCT SPECIFICATION DATA ON ALL SPECIFIED FINISHES FOR ARCHITECT'S AND OWNER'S RECORD.
9. SUBSTITUTIONS SHALL NOT BE SUBMITTED DURING THE REVIEW PROCESS. SEE "GENERAL NOTES", SHEET T-2

ROOM FINISH SCHEDULE

RM NO.	ROOM NAME	FLOOR		WALLS				CEILING	REMARKS
		FIELD	BASE	NORTH	WEST	SOUTH	EAST		
201	EXISTING HYGIENIST	LVT	B-1	P	P	P	P	ACT3	NEGATIVE PRESSURE
202	TREATMENT RM #7	LVT	B-1	P	P	P	P	ACT-1	
203	TREATMENT RM #8	LVT	B-1	P	P	P	P	ACT-1	
204	TREATMENT RM #9	LVT	B-1	P	P	P	P	ACT-1	
205	TREATMENT RM #10	LVT	B-1	P	P	P	P	ACT-1	NEGATIVE PRESSURE
206	TREATMENT RM #11	LVT	B-1	P	P	P	P	ACT-1	
207	CLOSET	LVT	B-1	P	P	P	P	ACT-1	
208	CLOSET	LVT	B-1	P	P	P	P	ACT-1	
209	CHECK-OUT	LVT	B-1	P	P	P	P	ACT-2	
210	CLOSET	LVT	B-1	P	P	P	P	ACT-1	
211	CORRIDOR	LVT	B-1	P	P	P	P	ACT-1	
212	EXISTING PUMP ROOM	LVT	B-1	P	P	P	P	GYP P-4	
213	EXISTING STORAGE	LVT	B-1	P	P	P	P	ACT-2	
214	EXISTING CHECK-IN	LVT	B-1	P	P	P	P	ACT-2	
215	WAITING	LVT	B-1	P	P	P	P	ACT-2	
216	X-RAY	LVT		P	P	P	P	ACT-1	
217	STERILIZATION	LVT	B-1	P	P	P	P	ACT-1	

FINISH/ MATERIALS LEGEND

FINISH NO.	DESCRIPTION	MANUFACTURER	MFRS NUMBER	COLOR	FINISH	SIZE	REMARKS
INTERIOR FLOORING							
LVT-1	LUXURY VINYL PLANK		FONU NUGRAIN	3710 GUNMETAL	EMBOSSTICK (TK)	6" X 48"	MATCH EXISTING LVT. SUBMIT SAMPLES FOR REVIEW PRIOR TO PURCHASE
B-1	4" RUBBER BASE	JOHNSONITE	193	BLACK BROWN			COVE BASE AT VINYL FLOOR, STRAIGHT BASE AT CARPET. WITH LLOC UNDERLAP OUTSIDE CORNERS AND IC STANDARD INSIDE CORNERS
INTERIOR PAINT							
P-1	LATEX PAINT	SHERWIN WILLIAMS			EGGSHELL		WALLS
P-2	LATEX PAINT	SHERWIN WILLIAMS			EGGSHELL		ACCENT WALLS
P-3	LATEX PAINT	SHERWIN WILLIAMS			SEMI GLOSS		TRIM AND DOOR FRAMES
P-4	LATEX PAINT	SHERWIN WILLIAMS			FLAT		CEILING AND SOFFITS
INTERIOR CEILING FINISHES							
ACT-1	ACOUSTICAL CEILING TILE	CERTAINTEED	PERFORMA SERENO FINE FISSURED SFF-454	WHITE	REVEAL BEVELED EDGE	24 x 24 x 3/4	WITH MATCHING 15/16" TEE GRID SYSTEM CAC 40 NRC 0.70
ACT-2	WASHABLE ACOUSTICAL CEILING TILE	CERTAINTEED	ECHO FHOON FOCUS A 3540 4807	WHITE	L	24x24 OR 48 x 3/4	WITH MATCHING 15/16" TEE GRID SYSTEM CAC 21 NRC 0.95
ACT-3	GASKETED ACOUSTICAL CEILING TILE	ARMSTRONG OALLA HEALTHZONE	AIRASSURE 1354	WHITE	TEGULAR	24X24X1"	
INTERIOR MILLWORK FINISHES							
PL-1	PLASTIC LAMINATE			MATCH EXISTING CABINETS	TEXTURED		COUNTER TOPS
PL-2	PLASTIC LAMINATE			MATCH EXISTING CABINETS	TEXTURED		MILLWORK CABINETS AND BASES
PL-3	WOOD VENEER LAMINATE	LAMINART	994 - WG	GALLERY WALNUT	WEATHERED GRAIN FINISH		MILLWORK CABINETS
M1	STONE SURFACE	DUPONT CORIAN		DEEP BLACK QUARTZ	MATT FINISH	3/4" TH	CHECK IN AND CHECK OUT COUNTERS WINDOW SILLS
FINISH NO.	DESCRIPTION	MANUFACTURER	MFRS NUMBER	COLOR	FINISH	SIZE	REMARKS

castellone architecture
792 great road
lincoln, ri 02865
401-465-9861

DRAWN BY: PAC
JUNE 12, 2026
REVISIONS:

DENTAL CLINIC 2ND FLOOR ALTERATIONS

TRI-COUNTY COMMUNITY ACTION AGENCY
1126 HARTFORD AVENUE
JOHNSTON, RI 02919

ROOM FINISH SCHEDULE, FINISHES LEGEND, DETAILS

A4-2

MECHANICAL DEMOLITION NOTES:

1. CONTRACTOR SHALL PROVIDE A PRE-BALANCE REPORT FOR THREE EXISTING ROOF-TOP AIR HANDLING UNITS. REPORT SHALL INCLUDE SUPPLY & RETURN CFM QUANTITIES & MINIMUM OUTDOOR AIR CFM FOR EACH ROOF-TOP UNIT. SUBMIT THE REPORT TO THE ARCH & ENGINEER FOR POSSIBLE FURTHER ACTION.

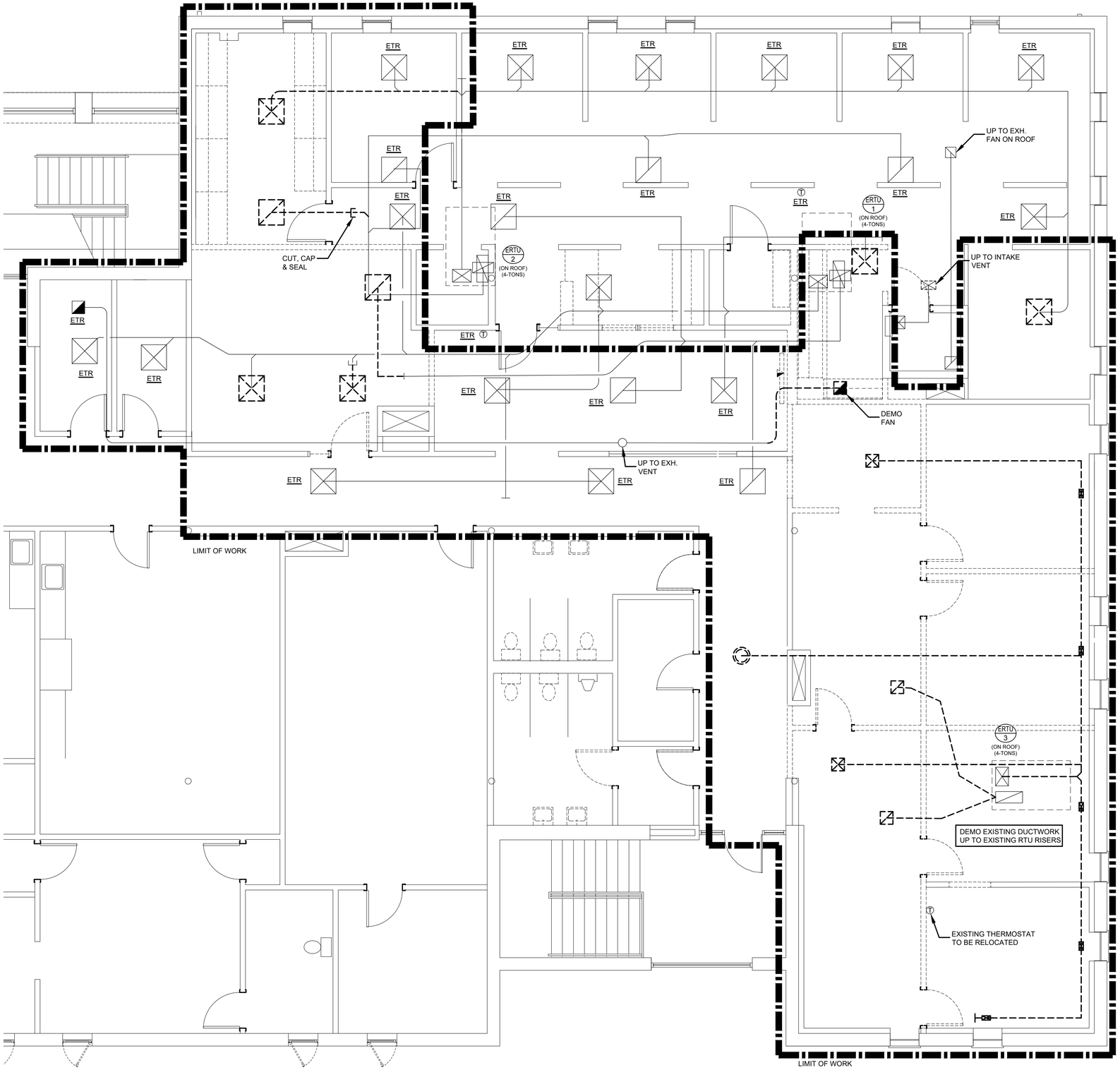

NORTH

MECHANICAL - SECOND FLOOR DEMOLITION PLAN
1/4" = 1'-0"

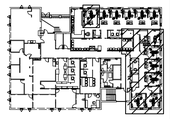

KEY PLAN
SECOND FLOOR
NORTH

castellone architecture
792 great road
lincoln, ri 02865
401-465-9861

ENGINEERING DESIGNS SERVICES INCORPORATED
141 Mineral Spring Avenue, North Providence, RI 02904
Tel (401) 765-7439 Fax (401) 765-2994

DRAWN BY: YYY
JUNE 12, 2026
REVISIONS:

DENTAL CLINIC 2ND FLOOR ALTERATIONS

TRI-COUNTY COMMUNITY ACTION AGENCY
1126 HARTFORD AVENUE
JOHNSTON, RI 02919

MECHANICAL
SECOND FLOOR
DEMOLITION PLAN

MD1-1

BID SET

ABBREVIATIONS

GENERAL ABBREVIATIONS:

AAV	AUTOMATIC AIR VENT	L	LENGTH
ADD'L	ADDITIONAL	LAT	LEAVING AIR TEMPERATURE
AFF	ABOVE FINISHED FLOOR	LB	POUND
AMS	AIR FLOW MEASURING STATION	LF	LINEAR FEET
ALT	ALTITUDE OR ALTERNATE	LD	LINEAR DIFFUSER
AMP	AMPERE	LRA	LOCKED ROTOR AMPS
AP	ACCESS PANEL	LVD	LOUVERED DOOR
APD	AIR PRESSURE DROP	LVG	LEAVING
ARCH	ARCHITECT	LWT	LEAVING WATER TEMPERATURE
ATC	AUTOMATIC TEMP. CONTROL		
ATM	ATMOSPHERE	MAX	MAXIMUM
AVG	AVERAGE	MBH	THOUSAND BTH
		MCA	MINIMUM CIRCUIT AMPS
BDD	BACKDRAFT DAMPER	MD	MOTOR OPERATED DAMPER
BG	BLAST GATE DAMPER	MECH	MECHANICAL
BHP	BRAKE HORSEPOWER	MEZZ	MEZZANINE
BI	BACKWARDS INCLINED	MFR	MANUFACTURER
BLDG	BUILDING	MIN	MINIMUM
BMS	BUILDING MANAGEMENT SYSTEM	MUA	MAKE-UP AIR
BOD	BOTTOM OF DUCT		
BOP	BOTTOM OF PIPE	N/A	NOT APPLICABLE
BSMT	BASEMENT	NC	NORMALLY CLOSED
BTU	BRITISH THERMAL UNIT	NC	NOISE CRITERIA
BTH	BTU PER HOUR	NIC	NOT IN CONTRACT
		NO	NORMALLY OPEN
CA	COMPRESSED AIR	No.	NUMBER
CDW	CONDENSER WATER	NOM	NOMINAL
CENT	CENTRIFUGAL	NTS	NOT TO SCALE
CF	CUBIC FEET		
CFM	CUBIC FEET PER MINUTE	OA	OUTSIDE AIR
CL	CENTERLINE	OD	OUTSIDE DIAMETER
C.L.	COLUMN LINE	ODP	OPEN DRIP PROOF
CND	CONDENSATE	OED	OPEN END DUCT
CLG	CEILING OR COOLING	OV	OUTLET VELOCITY
C.O.	CLEAN-OUT		
CO	CARBON MONOXIDE	PD	PRESSURE DROP
CO2	CARBON DIOXIDE	PH	PHASE
COL	COLUMN	PHC	PREHEAT COIL
CONN	CONNECTION	PBG	PLUMBING
CONTR	CONTRACTOR	POS	PROVIDED BY OTHER SECTION
CV	CONSTANT VOLUME	PSI	POUNDS PER SQUARE INCH
		PSIA	PSI ABSOLUTE
DB	DRY BULB TEMPERATURE	PSID	PSI DIFFERENTIAL
		PSIG	PSI GAUGE
DEG	DEGREE DIRECT	PVC	POLYVINYL CHLORIDE
DDC	DIGITAL CONTROL	PRV	PRESSURE REDUCING VALVE
DIA	DIAMETER		
DIFF	DIFFUSER	QTY	QUANTITY
DIM	DIMENSION		
DN	DOWN	R	RADIUS
DP	DIFFERENTIAL PRESSURE	RA	RETURN AIR
DWDI	DOUBLE WIDTH DOUBLE INLET	REG	REGISTER
DX	DIRECT EXPANSION	RET	RETURN
		REQD	REQUIRED
EA	EACH OR EXHAUST AIR	RH	RELATIVE HUMIDITY
EAT	ENTERING AIR TEMPERATURE	RLA	RUNNING LOAD AMPS
ECH	ELECTRIC CABINET HEATER	RLL	REFRIGERANT LIQUID LINE
EFF	EFFICIENCY	RM	ROOM
ELEC	ELECTRICAL	RPM	REVOLUTIONS PER MINUTE
ELEV	ELEVATION	RSL	REFRIGERANT SUCTION LINE
EMER	EMERGENCY		
EMS	ENERGY MANAGEMENT SYSTEM	SA	SUPPLY AIR
ENT	ENTER	SCH	SCHEDULE
ESP	EXTERNAL STATIC PRESSURE	SD	SMOKE DETECTOR
ETR	EXISTING TO REMAIN	SEN	SENSIBLE
EXH	EXHAUST	SHC	SENSIBLE HEAT CAPACITY
EXIST.	EXISTING	SP	STATIC PRESSURE
		SPECS	SPECIFICATIONS
F	FAHRENHEIT OR FAN	SQ	SQUARE
FA	FREE AREA	SF	SQUARE FEET
FD	FIRE DAMPER (ACCESS DOOR)	SS	STAINLESS STEEL
FLA	FULL LOAD AMPS	STL	STEEL
FLEX	FLEXIBLE	SUP	SUPPLY
FPM	FEET PER MINUTE	SWSI	SINGLE WITH SINGLE INLET
FPS	FEET PER SECOND		
FRP	FIBERGLASS REINFORCED PLASTIC	T	TEMPERATURE
FS	FLOW SWITCH	TEL	TELEPHONE
FT	FEET	TEFC	TOT. ENCLOSED FAN COOLED
FTR	FINNED TUBE RADIATION	TEMP	TEMPERATURE
		TSTAT	THERMOSTAT
G	GAS	TOD	TOP OF DUCT
GAL	GALLONS	TON	12,000 BTH
GALV	GALVANIZED	TOP	TOP OF PIPE
GC	GENERAL CONTRACTOR	TOT	TOTAL
GPH	GALLONS PER HOUR	TSP	TOTAL STATIC PRESSURE
GPM	GALLONS PER MINUTE	TYP	TYPICAL
GWB	GYPSUM WALL BOARD		
		V	VENT
HB	HOSE BIBB	VB	VACUUM BREAKER
HC	HEATING COIL	VD	VOLUME DAMPER
HEX	HEAT EXCHANGER	V	VOLTS (ELECTRICAL)
HGT	HEIGHT	VEL	VELOCITY
HP	HORSEPOWER		
HR	HOUR	W	WIDTH OR WATT
HTG	HEATING	W/	WITH
HW	HOT WATER	WB	WET BULB TEMPERATURE
HZ	HERTZ	WC	WATER COLUMN
		WG	WATER GAUGE
ID	INSIDE DIAMETER	WMS	WIRE MESH SCREEN
IN	INCHES	W/O	WITHOUT
		WPD	WATER PRESSURE DROP
KW	KILOWATT	WTD	WATER TEMPERATURE DIFF.

CONTROLS ABBREVIATIONS:

ACD	AUTOMATIC CONTROL DAMPER	LSPS	LOW STATIC PRESSURE SWITCH
ACV	AUTOMATIC CONTROL VALVE	LS	LEVEL SENSOR
AMS	AIR FLOW MEASURING STATION		
ALM	ALARM	MD	MOTORIZED DAMPER
ATC	AUTOMATIC TEMPERATURE CONTROL		
ATS	AIR TEMPERATURE SENSOR	NC	NORMALLY CLOSED (POWER LOSS)
		NO	NORMALLY OPEN (POWER LOSS)
BD	BACKDRAFT DAMPER		
BV	BYPASS VALVE	OAH	OUTSIDE AIR HUMIDITY SENSOR
		OAT	OUTSIDE AIR TEMP. SENSOR
CO2	CARBON DIOXIDE SENSOR		
CO	CARBON MONOXIDE SENSOR	RH	RELATIVE HUMIDITY
CT	CURRENT TRANSFORMER		
CV	CONTROL VALVE	S	SWITCH
		SP	STATIC PRESSURE SENSOR
DDC	DIRECT DIGITAL CONTROL	SD	SMOKE DETECTOR
DPS	DIFFERENTIAL PRESSURE SWITCH	SPD	SPEED CONTROL
DPT	DIFFERENTIAL PRESSURE SENSOR	S/S	START/STOP
DPV	DIFF. PRESSURE BYPASS VALVE		
DSD	DUCT MOUNTED SMOKE DETECTOR	T	THERMOSTAT
DWDI	DOUBLE WIDTH DOUBLE INLET	TS	TEMPERATURE SENSOR
ES	END SWITCH	WTS	WATER TEMPERATURE SENSOR
FM	FLOW METER/TRANSMITTER		
FZ	FREEZESTAT		
H	HUMIDISTAT		
HEPA	HIGH EFF. PARTICULATE AIR FILTER		
HGB	HOT GAS BYPASS		
HHL	HIGH HUMIDITY LIMIT SENSOR		
HOA	HANDS-OFF AUTOMATIC SWITCH		
HS	HUMIDITY SENSOR		
HZ	HERTZ		

EQUIPMENT ABBREVIATIONS:

AC	AIR CONDITIONING UNIT	GMS	GLYCOL MAKE-UP SYSTEM
ACU	AC CONDENSING UNIT	GUH	GAS FIRED UNIT HEATER
AHU	AIR HANDLING UNIT		
AS	AIR SEPARATOR	H	HUMIDIFIER
		HP	HEAT PUMP
B	BOILER	HPU	HP CONDENSING UNIT
BB	BASE BOARD	HV	HEATING & VENTILATING UNIT
BC	BRANCH CONTROLLER	HWC	HOT WATER COIL
BP	BOILER PUMP		
BT	BUFFER TANK	LV	LOUVER
CAC	CRITICAL COOLING AC UNIT	KEF	KITCHEN EXHAUST FAN
CC	COOLING COIL		
CCU	CC CONDENSING UNIT	MAU	MAKE-UP AIR UNIT
CEF	CEILING EXHAUST FAN	MCC	MOTOR CONTROL CENTER
CH	CHILLER		
CP	CIRCULATOR PUMP	P	PUMP
CT	COOLING TOWER	PTAC	PACKAGED TERMINAL AC UNIT
CUH	CABINET UNIT HEATER		
CWC	CHILLED WATER COIL	R	RETURN GRILLE
		REF	ROOF EXHAUST FAN
DC	DRY COOLER	RHP	RADIANT HEATING PANEL
DEF	DISHWASHER EXHAUST FAN	RTU	ROOF TOP UNIT
DSF	DESTRATIFICATION FAN		
		S	SUPPLY DIFFUSER
E	EXHAUST GRILLE	SA	SOUND ATTENUATOR
EBB	ELECTRIC BASE BOARD	SAC	SPLIT AC UNIT
ECH	ELECTRIC CABINET HEATER	SHP	SPLIT HEAT PUMP
ECH	ELECTRIC CEILING HEATER	SF	SUPPLY FAN
EF	EXHAUST FAN		
ERV	ENERGY RECOVERY VENTILATOR	T	TRANSFER GRILLE
ET	EXPANSION TANK		
EUH	ELECTRIC UNIT HEATER	UH	UNIT HEATER
		UV	UNIT VENTILATOR
F	FURNACE		
FC	FAN COIL UNIT	VAV	VARIABLE AIR VOLUME BOX
FPB	FAN POWERED VAV	VFD	VARIABLE FREQUENCY DRIVE
FT	FINTUBE		
		WSHP	WATER SOURCE HEAT PUMP

MECHANICAL SYMBOL LEGEND

AIR DEVICES

- 4-WAY SUPPLY DIFFUSER
- 3-WAY SUPPLY DIFFUSER
- 2-WAY SUPPLY DIFFUSER
- 2-WAY CORNER SUPPLY DIFFUSER
- 1-WAY SUPPLY DIFFUSER
- RETURN REGISTER
- EXHAUST REGISTER
- SIDE WALL SUPPLY DIFFUSER
- SIDE WALL RETURN OR EXHAUST GRILLE

DUCTWORK

- STANDARD SIZE REDUCTION
- ASYMMETRICAL TRANSITION
- SQUARE-TO-ROUND TRANSITION
- STANDARD BRANCH TAKE-OFF
- ROUND BRANCH TAKE-OFF
- STANDARD TEE
- STANDARD TEE WITH TURNING VANES
- SLOPED DUCT RISE
- FIRE DAMPER ACCESS DOOR (OR)
- GREASE DUCT ACCESS DOOR
- DUCT RISE
- DUCT DROP
- STANDARD SQUARE ELBOW
- SQUARE ELBOW WITH TURNING VANES
- STANDARD RADIUS ELBOW (R=D)
- FIRE WRAPPED DUCTWORK
- ACOUSTICALLY LINED DUCTWORK
- OPEN ENDED DUCT OUTLET
- OPEN ENDED DUCT INTAKE
- OPEN ENDED DUCT OUTLET W/ SCREEN
- OPEN ENDED DUCT INTAKE W/ SCREEN

CONTROLS

- TIME CLOCK
- THERMOSTAT
- TS — TEMPERATURE SENSOR
- DSD — DUCT MOUNTED SMOKE DETECTOR

AIR DAMPERS

- MANUALLY ADJUSTABLE VOLUME DAMPER
- FIRE DAMPER
- M — MOTORIZED DAMPER

TAGS

- X # CFM — DIFFUSER TAG
- X # — EQUIPMENT TAG
- # — REVISION
- CONNECT NEW TO EXISTING

LEGEND NOTE:
NOT ALL SYMBOLS ARE NECESSARILY USED. ABSENCE OF A SYMBOL ON THE DRAWINGS DOES NOT NECESSARILY MEAN IT IS NOT REQUIRED. REFER TO DETAILS & SPECIFICATIONS FOR A COMPLETE UNDERSTANDING OF WORK REQUIRED.

GENERAL CONSTRUCTION NOTES:

1. ALL WORK IS TO BE PERFORMED IN STRICT COMPLIANCE WITH LOCAL CODES AND ALL OTHER REGULATIONS GOVERNING WORK OF THIS NATURE.
2. THE CONTRACTOR IS RESPONSIBLE FOR ALL WORK, MATERIALS, AND LABOR TO SATISFY A COMPLETE WORKING SYSTEM WHETHER SPECIFIED OR IMPLIED.
3. THIS CONTRACTOR, PRIOR TO SUBMITTING HIS BID, SHALL VISIT THE PROJECT SITE TO FAMILIARIZE HIMSELF WITH ALL EXISTING CONDITIONS. REQUESTS FOR COMPENSATION FOR EXTRA WORK, WHICH WOULD HAVE BEEN EVIDENT BY COMPLIANCE WITH THE PREVIOUS STATEMENT, WILL NOT BE CONSIDERED. THE CONTRACTOR SHALL CONDUCT A THOROUGH FIELD INVESTIGATION TO VERIFY WORK SHOWN ON THE DRAWINGS. THE DRAWINGS REFLECT THE BEST AVAILABLE INFORMATION FROM EXISTING PLANS AND SITE INVESTIGATIONS.
4. THE MECHANICAL PLANS ARE INTENDED TO BE DIAGRAMMATIC AND ARE BASED ON ONE MANUFACTURER'S EQUIPMENT. THEY ARE NOT INTENDED TO SHOW THE EXACT ROUTING OF SYSTEMS OR LOCATION OF COMPONENTS. THE EXACT LOCATIONS, DIMENSIONS AND ALL OTHER DETAILS OF EQUIPMENT ARE THE RESPONSIBILITY OF THIS CONTRACTOR. THIS CONTRACTOR SHALL VERIFY THE ACTUAL DIMENSIONS OF THE EQUIPMENT PROPOSED TO ENSURE THAT THE EQUIPMENT WILL FIT IN THE AVAILABLE SPACE. PROVIDE ALL DUCT AND PIPE TRANSITIONS REQUIRED FOR CONNECTION TO EQUIPMENT.
5. THIS CONTRACTOR SHALL FIELD VERIFY ALL DIMENSIONS AND EXISTING CONDITIONS PRIOR TO PROCEEDING WITH ANY WORK. WHERE DISCREPANCIES OCCUR BETWEEN THESE DOCUMENTS AND EXISTING CONDITIONS, THE DISCREPANCY SHALL BE REPORTED TO THE OWNER AND/OR ENGINEER FOR EXPEDITING AND RESOLVE.
6. ALL WORK SHALL BE PERFORMED IN A CLEAN AND WORKMANLIKE MANNER. CARE SHALL BE EXERCISED TO MINIMIZE ANY INCONVENIENCE OR DISTURBANCE TO OTHER AREAS OF THE BUILDING WHICH ARE TO REMAIN IN OPERATION. ISOLATE WORK AREAS BY MEANS OF TEMPORARY PARTITIONS AND/OR TARPS TO KEEP DUST AND DEBRIS WITHIN THE CONSTRUCTION AREA.
7. CLEAN THE JOB SITE DAILY AND REMOVE FROM THE PREMISES ANY DIRT AND DEBRIS CAUSED BY THE PERFORMANCE OF THE WORK INCLUDED IN THIS CONTRACT.
8. ALL OPENINGS IN WALLS SHALL BE KEPT PROPERLY SEALED AT ALL TIMES, EXCEPT WHEN BEING WORKED ON TO PRECLUDE THE POSSIBILITY OF FLOODING DUE TO STORM OR OTHER CAUSES.
9. THE CONTRACTOR SHALL BE RESPONSIBLE FOR THE SAFEKEEPING OF HIS OWN PROPERTY ON THE JOB SITE. OWNER ASSUMES NO RESPONSIBILITY FOR PROTECTION OF PROPERTIES AGAINST FIRE, THEFT, AND ENVIRONMENTAL CONDITIONS.
10. THIS CONTRACTOR SHALL COORDINATE HIS WORK WITH ALL OTHER TRADES PRIOR TO FABRICATION, PURCHASE AND/OR INSTALLATION OF ALL WORK. ALL OFFSETS IN PIPING AND DUCTS TO AVOID OBSTRUCTIONS SHALL BE PROVIDED AT NO COST TO THE OWNER.
11. CONTRACTOR SHALL REFER TO THE COMPLETE SET OF CONTRACT DOCUMENTS INCLUDING SPECIFICATIONS AND OTHER TRADES FOR A FULL UNDERSTANDING OF ALL WORK REQUIRED.
12. WHERE USED THE TERM "PROVIDE" SHALL MEAN "FURNISH AND INSTALL".
13. PROVIDE ALL REQUIRED RIGGING TO ACCOMMODATE THE REMOVAL & INSTALLATION OF ALL EQUIPMENT.
14. ALL EQUIPMENT AND MATERIALS SHALL BE AS SPECIFIED OR "APPROVED EQUAL" BY THE ENGINEER OR ARCHITECT.
15. REFER TO ARCHITECTURAL REFLECTED CEILING PLAN FOR EXACT LOCATION OF REGISTERS, DIFFUSERS, AND GRILLES.
16. ALL DUCTWORK SHALL BE INSTALLED AS INDICATED ON THE DRAWINGS IN A NEAT AND WORKMANLIKE MANNER AND BE SUPPORTED AS REQUIRED BY CODES. DUCTWORK AND PIPING SHALL BE SET UP AND DOWN AND OFFSET AS REQUIRED TO SUIT FIELD CONDITIONS. DIELECTRIC COUPLINGS SHALL BE USED WHERE DISSIMILAR METALS ARE JOINED.
17. IF A SECTION OF DUCT IS NOT LABELED FOR SIZE, THEN THE LARGER SIZE INDICATED ON THE DRAWINGS SHALL PREVAIL. SIZE OF DUCT RUN-OUTS TO DIFFUSERS SHALL EQUAL DIFFUSER NECK SIZE UNLESS OTHERWISE NOTED.
18. ALL CONCEALED ELECTRICAL CONNECTIONS SHALL BE HARD WIRED. PLUGS SHALL NOT BE USED AS A DISCONNECTING MEANS IN CONCEALED LOCATIONS.
19. CONTRACTOR SHALL PROVIDE ALL TEMPERATURE CONTROLS INCLUDING WIRING, TUBING, AND THERMOSTATS (WITH LOCKING COVERS) AND ALL MISCELLANEOUS APPURTENANCES TO MEET THE INTENT OF THESE DOCUMENTS.
20. ALL FRESH AIR INTAKES & DIRECT VENTS SHALL TERMINATE AT LEAST 10' HORIZONTALLY FROM ANY GAS METERS.
21. ALL THERMOSTATS, CONTROL SWITCHES, ETC. SHALL BE INSTALLED 48" AFF.

GENERAL RENOVATION NOTES:

1. ALL SHUT DOWNS OF EXISTING SYSTEMS SHALL BE SCHEDULED AND APPROVED BY THE OWNER PRIOR TO COMMENCING WITH WORK.
2. NO DUCTWORK, PIPING, EQUIPMENT, ETC. SHALL BE REMOVED, DISCONNECTED, OR SHUT DOWN WITHOUT PRIOR REVIEW WITH THE OWNER AND/OR ENGINEER TO CONFIRM THAT AREAS TO REMAIN IN OPERATION WILL NOT BE AFFECTED. IF ANY AREAS NOT WITHIN THE SCOPE OF WORK ARE AFFECTED BY ANY SHUTDOWN, REMOVAL, OR DISCONNECTION, 1 WEEK NOTICE MUST BE GIVEN TO THE OWNER INDICATING WHICH AREAS WILL BE AFFECTED, WHEN THE PROPOSED SHUTDOWN WILL OCCUR, AND FOR HOW LONG A PERIOD.
3. USE OF THE OWNER'S ELEVATORS AND BUILDING CORRIDORS FOR HANDLING OF THE OWNER'S AND REMOVED EQUIPMENT AND MATERIALS SHALL BE AT THE DIRECTION OF THE OWNER AND SHALL BE COORDINATED WITH HIS OPERATIONS.
4. ALL ITEMS REMOVED SHALL BECOME PROPERTY OF THE OWNER AND SHALL BE DISPOSED OF AS PER OWNER'S INSTRUCTIONS, UNLESS INDICATED OTHERWISE. ALL ITEMS WHICH ARE NOT TO BE STORED ON SITE BY OWNERS SHALL BE REMOVED FROM THE BUILDING IMMEDIATELY.
5. DISCONNECT AND REMOVE ALL EXISTING EQUIPMENT, PIPING, DUCTWORK, FLUES, REGISTERS, SUPPORTS, HANGERS, AND ALL OTHER MECHANICAL COMPONENTS MADE OBSOLETE BY THIS PROJECT.
6. PRIOR TO RENOVATION, CONTRACTOR TO RECORD ALL SUPPLY & RETURN MAIN AIRFLOWS & SUBMIT A COPY TO THE ENGINEER. ALL READINGS SHALL BE PERFORMED BY A CERTIFIED NEBB CONTRACTOR. COMPARE NEW EQUIPMENT VALUES & ALERT DISCREPANCIES FOR ENGINEER FEEDBACK. AT THE END OF THE PROJECT EXISTING SYSTEMS SHALL BE BALANCED TO PRE-CONSTRUCTION VALUES OR ADJUSTED VALUES BASED ON PRE-CONSTRUCTION TESTING ENGINEERING FEEDBACK.
7. ALL NEW, RELOCATED, OR EXISTING EQUIPMENT AFFECTED BY THIS SCOPE OF WORK SHALL BE REBALANCED BEFORE BEING PLACED IN SERVICE.
8. PROVIDE ALL REQUIRED CUTTING AND PATCHING AS REQUIRED TO COMPLETE THE INSTALLATION OF NEW MECHANICAL SYSTEM. PATCH ALL SURFACES TO MATCH AND MAINTAIN ALL FIRE RATINGS.
9. EXISTING ROOF CUTTING, FLASHING, SEALING, ETC. TO BE ACCOMPLISHED BY A ROOFING CONTRACTOR APPROVED BY THE EXISTING ROOF MANUFACTURER AND INSTALLED IN ACCORDANCE WITH ROOF MANUFACTURER'S RECOMMENDATIONS SO AS NOT TO VOID ROOF WARRANTY.
10. EXISTING MATERIALS THAT ARE REMOVED SHALL NOT BE REUSED IN NEW SYSTEMS, EXCEPT WHERE INDICATED AS SUCH ON THE DRAWINGS. ALL MATERIALS AND EQUIPMENT LISTED AS NEW MUST BE NEW.
11. THE FIRE PROOFING OF THE EXISTING STRUCTURE IS NOT TO BE REMOVED FOR THE INSTALLATION OF HANGERS, SUPPORTS AND DUCTWORK ETC. IF FIRE PROOFING IS DAMAGED, IT SHALL BE REPAIRED AT THE EXPENSE OF THE TRADE.

castellone architecture
792 great road
lincoln, ri 02865
401-465-9861

CDS ENGINEERING DESIGN SERVICES INCORPORATED
141 Mineral Spring Avenue, Pawtucket, RI 02860
Tel (401) 765-7649 Fax (401) 765-2994

DRAWN BY: YYY
JUNE 12, 2026
REVISIONS:

DENTAL CLINIC 2ND FLOOR ALTERATIONS

TRI-COUNTY COMMUNITY ACTION AGENCY
1126 HARTFORD AVENUE
JOHNSTON, RI 02919

MECHANICAL LEGENDS & NOTES

M0-1

BID SET

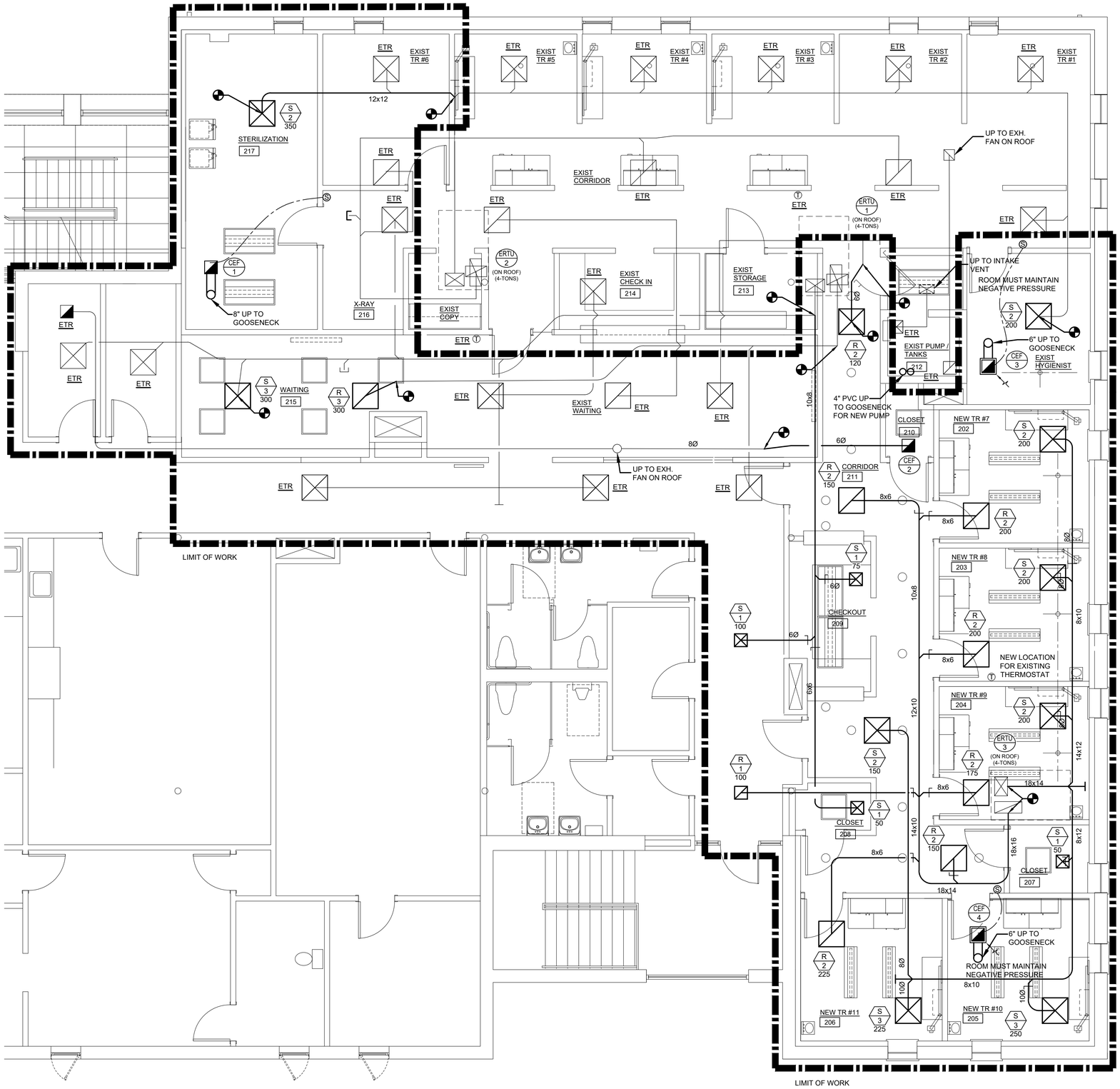

NORTH

MECHANICAL - SECOND FLOOR PLAN

1/4" = 1'-0"

ACH SCHEDULE

ROOM/AREA	FT³	O.A. ACH REQUIRED	ACH REQUIRED	O.A. ACH SPECIFIED	ACH SPECIFIED	SUPPLY CFM	RETURN CFM	EXHAUST CFM
STERILIZATION 217	2,040	2.0	6.0	2.1	10.2	350	350	425
EXIST HYGIENIST	935	2.0	12.0	2.6	12.8	200	-	275
NEW TR #7 202	1,000	2.0	12.0	2.1	12.0	200	200	-
NEW TR #8 203	1,000	2.0	12.0	2.1	12.0	200	200	-
NEW TR #9 204	1,000	2.0	12.0	2.1	12.0	200	200	-
NEW TR #10 205	1,000	2.0	12.0	3.0	15.0	250	-	300
NEW TR #11 206	1,000	2.0	12.0	2.7	13.5	225	200	-

NOTE:
AIR BALANCE IS CALCULATED WITH ALL EQUIPMENT OPERATING AT DESIGN CAPACITY AND ECONOMIZERS OFF.

MECHANICAL NOTES:
1. CONTRACTOR TO VERIFY LOCATIONS OF THERMOSTATS & EXHAUST FAN SWITCHES WITH OWNER.

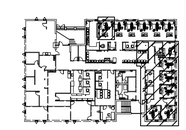

KEY PLAN
SECOND FLOOR
NORTH

castellone architecture
792 great road
lincoln, ri 02865
401-465-9861

CDS ENGINEERING DESIGN SERVICES INCORPORATED
141 Dupont Drive, Suite 8 P.O. Box 6102 Providence, RI 02940
Tel (401) 785-1489 Fax (401) 785-2994

DRAWN BY: YYY
JUNE 12, 2026
REVISIONS:

DENTAL CLINIC 2ND FLOOR ALTERATIONS

TRI-COUNTY COMMUNITY ACTION AGENCY
1126 HARTFORD AVENUE
JOHNSTON, RI 02919

MECHANICAL
SECOND FLOOR
PLAN

M1-1

BID SET

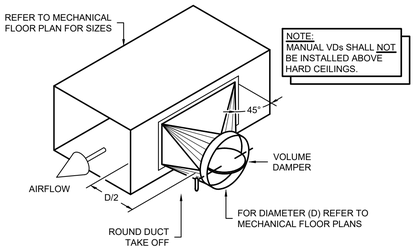

ROUND DUCT TAKE OFF DETAIL
NTS

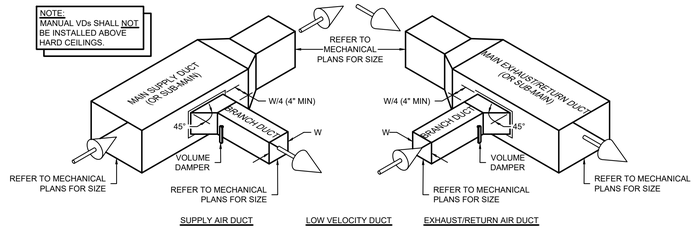

BRANCH DUCT CONNECTIONS
NTS

EXHAUST FAN SCHEDULE (BASED ON GREENHECK)

SYMBOL	MODEL	TYPE	DRIVE	CFM	ESP (IN)	FAN RPM	MOTOR DATA				UNIT WEIGHT (LBS.)	NOTES
							HP	RPM	FLA	VOLTAGE		
CEF-1	SP-A510-VG	CEILING	DIRECT	425	0.5	1243	106W	-	-	120	32	1,2,3,5
CEF-2	SP-A390-VG	CEILING	DIRECT	75	0.5	1340	21W	-	-	120	24	1,2,3,4
CEF-3	SP-A390-VG	CEILING	DIRECT	275	0.5	1270	58W	-	-	120	24	1,2,3,5
CEF-4	SP-A390-VG	CEILING	DIRECT	325	0.5	1372	66W	-	-	120	24	1,2,3,5

NOTES:
1. PROVIDE DISCONNECT. COORDINATE WITH E.C.
2. PROVIDE WITH BACKDRAFT DAMPER.
3. PROVIDE WITH ISOLATION KIT.
4. PROVIDE WITH DIGITAL TIME CLOCK.
5. PROVIDE WALL MOUNTED INDICATOR SWITCH LOCATED OUTSIDE OF ROOM.

EXISTING ROOFTOP UNIT SCHEDULE (BASED ON CARRIER)

SYMBOL	MODEL	NOMINAL CAPACITY	NOMINAL CFM	COOLING MBH	HEATING DATA			ELECTRICAL DATA			NOTES
					FUEL	INPUT MBH	OUTPUT MBH	MCA	MOP	VOLTAGE	
ERTU-1	48TCEA05A	4.0-TONS	1,600	45.0	NG	115.0	93.0	26.0	30	208/3/60	1,2
ERTU-2	48TCEA05A	4.0-TONS	1,600	450	NG	115.0	93.0	26.0	50	208/3/60	1,2
ERTU-3	48FCEA05A	4.0-TONS	1,600	47.0	NG	110.0	88.0	24.0	30	208/3/60	1,2

NOTES:
1. SHOWN FOR REFERENCE ONLY.
2. MAINTAIN EXISTING WALL MOUNTED THERMOSTATS.

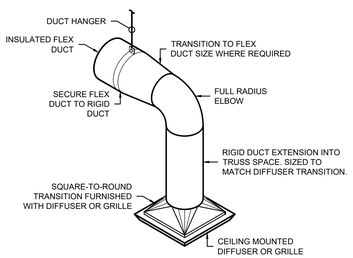

DIFFUSER CONNECTION DETAIL
NTS

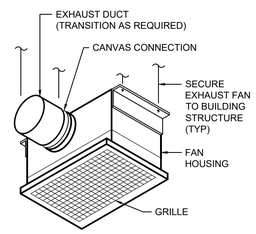

CEILING EXHAUST FAN DETAIL
NTS

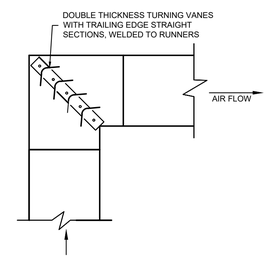

TYPICAL SQUARE ELBOW
NTS

AIR DEVICE SCHEDULE (BASED ON PRICE)

SYMBOL	MODEL	TYPE	NECK SIZE	CFM	MODULE SIZE	NOTES
S-1	ASCD	LAY-IN	6Ø	50-100	12x12	1,2
S-2	ASCD	LAY-IN	8Ø	101-200	24x24	1,2
S-3	ASCD	LAY-IN	10Ø	201-300	24x24	1,2
R-1	630	LAY-IN	6x6	50-100	12x12	1,2,3
R-2	630	LAY-IN	10x10	101-300	24x24	1,2,3

NOTES:
1. DUCT RUN-OUTS TO MASTCH NECK SIZE UNLESS OTHERWISE NOTED.
2. CONTRACTOR TO PROVIDE SQUARE TO ROUND TRANSITION WHERE REQUIRED.
3. PROVIDE 45° DEFLECTION, 3/4" BLADE SPACING, FRONT BLADE HORIZONTAL.

* - S-SUPPLY, R-RETURN, E-EXHAUST, T-TRANSFER
** - SIZE
*** - CFM

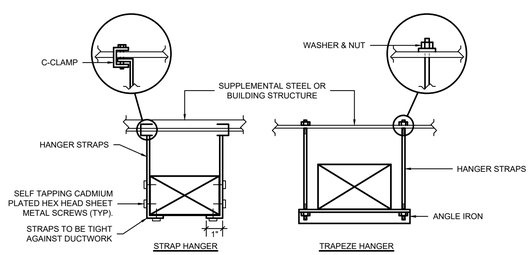

NOTE:
NO POP RIVETS ALLOWED, USE SELF-TAPPING SHEETMETAL SCREWS ONLY.

HANGER SIZES*

MAX. SIDE	HANGER	HORIZONTAL SUPPORT ANGLE	MAXIMUM SPACING
30"	1"x18" GAUGE STRAP	NONE REQUIRED	10'-0"
36"	1/4" ROD	1-1/2"x1-1/2"x1/8"	8'-0"
48"	1/4" ROD	2"x2"x1/8"	8'-0"
60"	5/16" ROD	2"x2"x1/8"	8'-0"
84"	3/8" ROD	2"x2"x1/8"	8'-0"

* FOR RECTANGULAR DUCTS

DUCT HANGER DETAIL
NTS

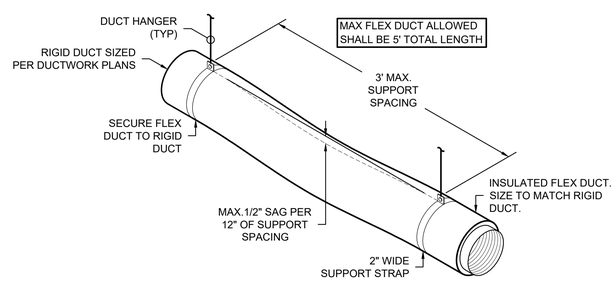

FLEX DUCT SUPPORT DETAIL
NTS

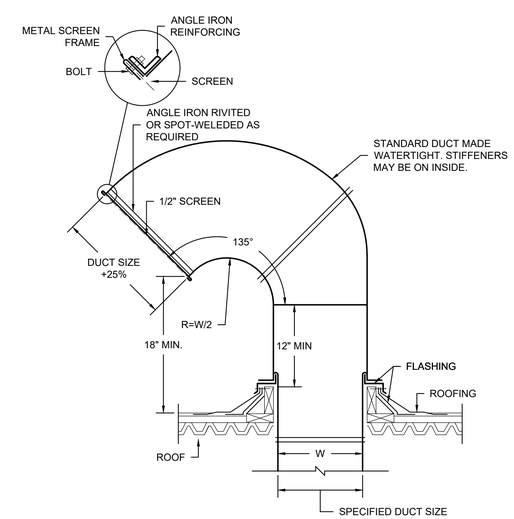

GOOSENECK DETAIL
NTS

castellone architecture
792 great road
lincoln, ri 02865
401-465-9861

ENGINEERING DESIGNS SERVICES INCORPORATED
141 Mineral Spring Avenue, North Providence, RI 02904
Tel (401) 765-7569 Fax (401) 765-2994

DRAWN BY: YYY
JUNE 12, 2026
REVISIONS:

DENTAL CLINIC 2ND FLOOR ALTERATIONS

TRI-COUNTY COMMUNITY ACTION AGENCY
1126 HARTFORD AVENUE
JOHNSTON, RI 02919

MECHANICAL SCHEDULES & DETAILS

M2-1

BID SET

XSECTION 230000 - MECHANICAL SPECIFICATIONS

PART 1:GENERAL

1.1 RELATED DOCUMENTS

A. DRAWINGS AND GENERAL PROVISIONS OF CONTRACT, INCLUDING GENERAL AND SUPPLEMENTARY CONDITIONS AND DIVISION-1 SPECIFICATION SECTIONS, APPLY TO WORK OF THIS SECTION.

1.2 SUMMARY OF WORK

A. PROVIDE COMPLETE FUNCTIONAL HEATING, VENTILATING AND AIR CONDITIONING SYSTEM AS SHOWN ON MECHANICAL CONSTRUCTION DOCUMENTS.

1.3 REFERENCE STANDARDS

A. NFPA STANDARDS

B. ANSI STANDARDS

C. ASME STANDARDS

D. ASTM STANDARDS

E. AWWA STANDARDS

F. ASHRAE STANDARDS

G. SMACNA STANDARDS

H. OSHA STANDARDS

I. NEBB STANDARDS

J. LOCAL CODES AND ORDINANCES

K. OWNER'S INSURANCE COMPANY REQUIREMENTS

L. WHERE THE CONTRACT DOCUMENTS INDICATE MORE STRINGENT REQUIREMENTS THAN THE ABOVE CODES AND ORDINANCES, THE CONTRACT DOCUMENTS SHALL TAKE PRECEDENCE.

M. FILE ALL DOCUMENTS, PAY ALL FEES AND SECURE ALL PERMITS, INSPECTIONS AND APPROVALS NECESSARY FOR THE WORK OF THIS SECTION.

1.4 CONTRACT DRAWINGS & SPECIFICATIONS

A. THE CONTRACT DRAWINGS ARE GENERALLY DIAGRAMMATIC AND CONVEY THE SCOPE OF WORK AND GENERAL ARRANGEMENT OF APPARATUS AND EQUIPMENT. THE LOCATIONS OF ALL ITEMS SHOWN ON THE DRAWINGS OR CALLED FOR IN THE SPECIFICATIONS THAT ARE NOT DEFINITELY FIXED BY DIMENSIONS ARE APPROXIMATE ONLY. THE EXACT LOCATIONS NECESSARY TO SECURE THE BEST CONDITIONS AND RESULTS MUST BE DETERMINED AT THE PROJECT AND SHALL HAVE THE APPROVAL OF THE ARCHITECT AND ENGINEER BEFORE BEING INSTALLED. THE SUBCONTRACTOR SHALL FOLLOW DRAWINGS IN LAYING OUT WORK AND SHALL CHECK DRAWINGS OF THE OTHER TRADES TO VERIFY SPACES IN WHICH WORK WILL BE INSTALLED. MAINTAIN MAXIMUM HEADROOM AND SPACE CONDITIONS AT ALL POINTS. IF DIRECTED BY THE GENERAL CONTRACTOR, ENGINEER AND/OR ARCHITECT, THE SUBCONTRACTOR SHALL, WITHOUT EXTRA CHARGE, MAKE REASONABLE MODIFICATIONS IN THE LAYOUT AS NEEDED TO PREVENT CONFLICT WITH WORK OF OTHER TRADES OR BEFORE PROPER EXECUTION OF THE WORK.

B. SPECIFICATIONS: THE SPECIFICATIONS ARE INTENDED ONLY TO COMPLEMENT THE DRAWINGS; HOWEVER, WORK DETAILED AND/OR NOTED ONLY ON THE DRAWINGS OR WORK DESCRIBED ONLY IN THE SPECIFICATIONS SHALL ALL BE CONSIDERED AS PART OF THE SCOPE OF WORK.

1.5 CONFLICT BETWEEN PLANS AND SPECIFICATIONS

A. IN CASE OF CONFLICT BETWEEN THE CONTRACT DRAWINGS AND SPECIFICATIONS, THE ENGINEER SHALL DETERMINE WHICH TAKES PRECEDENCE.

1.6 SHOP DRAWINGS AND PRODUCT DATA

A. SUBMITTALS: SUBMIT SHOP DRAWINGS, MANUFACTURERS DATA AND CERTIFICATES FOR EQUIPMENT, MATERIALS AND FINISH, AND PERTINENT DETAILS FOR EACH SYSTEM WHERE SPECIFIED IN EACH INDIVIDUAL SECTION, AND HAVE THEM APPROVED BEFORE PROCUREMENT, FABRICATION, OR DELIVERY OF THE ITEMS TO THE JOB SITE. PARTIAL SUBMITTALS WILL NOT BE ACCEPTABLE AND WILL BE RETURNED WITHOUT REVIEW. SUBMITTALS SHALL INCLUDE THE MANUFACTURER'S NAME, TRADE NAME, CATALOG MODEL OR NUMBER, NAMEPLATE DATA, SIZE, LAYOUT DIMENSIONS, CAPACITY, PROJECT SPECIFICATION AND PARAGRAPH REFERENCE, APPLICABLE INDUSTRY, AND TECHNICAL SOCIETY PUBLICATION REFERENCES, AND OTHER INFORMATION NECESSARY TO ESTABLISH CONTRACT COMPLIANCE OF EACH ITEM THE CONTRACTOR PROPOSE TO FURNISH.

B. SUBMIT IN ACCORDANCE WITH DIVISION 1.

C. IT IS THE INTENT OF THESE SPECIFICATIONS THAT ALL EQUIPMENT, MATERIALS AND WORKMANSHIP USED ON THIS PROJECT BE IN COMPLETE CONFORMANCE WITH ALL LOCAL, STATE AND NATIONAL CODES, ORDINANCES AND STANDARDS.

D. SUBSTITUTIONS SHALL BE EQUIVALENT TO SPECIFIED EQUIPMENT IN ALL ASPECTS OF QUALITY AND PERFORMANCE AND SHALL CONFORM TO THE INTENT STATED ABOVE. IT IS THE CONTRACTOR'S RESPONSIBILITY TO SUBMIT ONLY THOSE ITEMS THAT MEET THESE REQUIREMENTS. SHOULD ANY NON-CONFORMING ITEMS BE INSTALLED, THEY SHALL BE REPLACED BY THE CONTRACTOR AT NO ADDITIONAL COST TO THE OWNER.

E. THE APPROVAL OF THE EQUIPMENT DOES NOT RELIEVE THE SUBCONTRACTOR OF RESPONSIBILITY OF SHOP DRAWING ERRORS RELATED TO DETAILS, SIZES, QUANTITIES, WIRING DIAGRAM ARRANGEMENTS AND DIMENSIONS WHICH DEVIATE FROM THE SPECIFICATIONS, AND/OR JOB CONDITIONS AS THEY EXIST.

F. REFER TO GENERAL REQUIREMENTS FOR THE SUBSTITUTIONS OF EQUIPMENT AND SUBMITTAL OF SHOP DRAWINGS. IF APPARATUS OR MATERIALS ARE SUBSTITUTED FOR THOSE SPECIFIED, AND SUCH SUBSTITUTION NECESSITATES CHANGES IN, OR ADDITIONAL CONNECTIONS, PIPING, SUPPORTS, OR CONSTRUCTION, IT SHALL BE PROVIDED. CONTRACTOR TO ASSUME COST AND ENTIRE RESPONSIBILITY THEREOF.

1.7 INSPECTION AND TESTS

A. DURING THE PROGRESS OF THE WORK IT SHALL BE SUBJECT TO THE INSPECTION OF THE OWNER AND TO SUCH OTHER INSPECTORS, AS MAY HAVE JURISDICTION.

B. AT COMPLETION OF THE WORK, CONTRACTOR SHALL SUBMIT TO THE OWNER'S REPRESENTATIVE IN WRITING A STATEMENT STATING: (1) THAT THE WORK IS COMPLETE; (2) THAT THE ENTIRE INSTALLATION IS IN ACCORDANCE WITH THE SPECIFICATION; (3) THAT PRELIMINARY TESTS HAVE BEEN MADE; AND (4) THAT THE WORK IS READY FOR FINAL INSPECTION AND TEST.

C. A FINAL INSPECTION OF THE INSTALLATION TO DETERMINE COMPLIANCE WITH THE DRAWING AND SPECIFICATIONS WILL BE MADE BY THE OWNER'S REPRESENTATIVE. WORK WILL BE CHECKED FOR QUALITY OF MATERIALS, QUALITY OF WORKMANSHIP, PROPER INSTALLATION AND FINISHED APPEARANCE. THIS CONTRACTOR SHALL PROVIDE THE SERVICES OF THE PROJECT FOREMAN FOR INSPECTION PURPOSES. THE FOREMAN SHALL REMOVE AND REINSTALL ACCESS PANELS, CEILING TILES, ETC., AS REQUIRED TO FACILITATE ANY INSPECTIONS REQUIRED BY THE OWNER'S REPRESENTATIVE.

D. THE CONTRACTOR SHALL ARRANGE AND CONDUCT OPERATING TESTS ON ALL EQUIPMENT IN THE PRESENCE OF THE OWNER'S REPRESENTATIVE. THE COMPONENT PARTS OF SYSTEMS AND THE VARIOUS SYSTEMS SHALL BE DEMONSTRATED TO OPERATE IN ACCORDANCE WITH THE REQUIREMENTS AND INTENT OF THIS SPECIFICATION. ANY NON-COMPLYING OR DEFECTIVE MATERIALS OR WORKMANSHIP DISCLOSED AS A RESULT OF THE INSPECTION AND THE CONTRACTOR SHALL CORRECT TESTS PROMPTLY, AND THE TESTS REPEATED AS OFTEN AS NECESSARY UNTIL APPROVED AND ACCEPTED BY THE OWNER'S REPRESENTATIVE.

1.8 ELECTRICAL EQUIPMENT

A. ELECTRICAL COMPONENTS OF MECHANICAL EQUIPMENT AND SYSTEMS, SUCH AS MOTORS, FACTORY MOUNTED MOTOR STARTERS, DISCONNECTS, AND CONTROL EQUIPMENT SHALL BE PROVIDED UNDER THE RELATED SECTION OF DIVISION 23.

B. TEMPERATURE CONTROL EQUIPMENT, INCLUDING THERMOSTATS, ZONE VALVES, RELAYS, AQUASTATS, ETC. SHALL BE PROVIDED UNDER RELATED SECTIONS OF DIVISION 23. TEMPERATURE CONTROL WIRING NOT SPECIFICALLY SHOWN ON ELECTRICAL DRAWINGS SHALL BE PROVIDED UNDER RELATED SECTION OF DIVISION 23.

C. UPON COMPLETION OF TEMPERATURE CONTROL SYSTEM WIRING, THE RESPONSIBILITY OF THE CONTROL SYSTEM WILL FALL UNDER DIVISION 23.

D. ALL ELECTRICAL EQUIPMENT INSTALLED IN CONCEALED SPACES SHALL BE PROVIDED WITH A HARD-WIRED ELECTRICAL CONNECTION. PLUG-TYPE DISCONNECTS SHALL NOT BE ALLOWED IN CONCEALED SPACES. EQUIPMENT PROVIDED WITH PLUG-IN CORDS SHALL NOT HAVE THEIR CORDS MODIFIED.

1.9 OPENINGS IN EXTERIOR WALLS OR ROOF

A. OPENINGS IN EXTERIOR WALLS OR ROOF SHALL BE KEPT PROPERLY PLUGGED AND CAULKED AT ALL TIMES, EXCEPT WHEN BEING WORKED ON TO PRECLUDE THE POSSIBILITY OF FLOODING DUE TO STORM OR OTHER CAUSES. AFTER COMPLETION OF WORK, OPENINGS SHALL BE PERMANENTLY SEALED AND CAULKED IN A MANNER APPROVED BY THE ARCHITECT.

1.10 GUARANTEE

A. EXCEPT AS OTHERWISE SPECIFIED, ALL WORK, MATERIALS AND EQUIPMENT SHALL BE GUARANTEED AGAINST DEFECTS RESULTING FROM THE USE OF INFERIOR MATERIALS, EQUIPMENT, OR WORKMANSHIP FOR ONE YEAR FROM THE DATE OF FINAL COMPLETION OF THE CONTRACT, OR FROM FULL ACCEPTANCE BY THE OWNER, WHICHEVER IS EARLIER.

B. IF, WITHIN ANY GUARANTEE PERIOD, REPAIRS OR CHANGES TO GUARANTEED WORK ARE REQUIRED AS A RESULT OF THE USE OF DEFECTIVE MATERIALS OR EQUIPMENT, INFERIOR WORKMANSHIP OR WORK THAT IS NOT IN ACCORDANCE WITH THE TERMS OF THE CONTRACT, AND UPON RECEIPT OF NOTICE FROM THE OWNER, THE FOLLOWING SHALL BE DONE WITHOUT EXPENSE TO THE OWNER.

C. PLACE IN SATISFACTORY CONDITION IN EVERY PARTICULAR ALL OF SUCH GUARANTEED WORK AND CORRECT ALL DEFECTS THEREIN.

D. REPAIR ALL DAMAGE TO THE BUILDING OR SITE/EQUIPMENT OR CONTENTS THEREOF WHICH IS THE RESULT OF THE USE OF DEFECTIVE MATERIALS OR EQUIPMENT OR INFERIOR WORKMANSHIP, OR OF WORK NOT IN ACCORDANCE WITH THE TERMS OF THE CONTRACT.

E. MAKE GOOD ANY WORK OR MATERIALS, OR THE EQUIPMENT AND CONTENTS OF SAID BUILDING OR SITE DISTURBED IN FULFILLING ANY SUCH GUARANTEE.

F. IN FULFILLING THE REQUIREMENTS OF THE CONTRACT OR OF ANY GUARANTEE EMBRACED IN OR REQUIRED THEREBY, ANY WORK GUARANTEED UNDER ANOTHER CONTRACT IS DISTURBED, RESTORE SUCH DISTURBED WORK TO ORIGINAL CONDITION AND GUARANTEE SUCH RESTORED WORK TO THE SAME EXTENT AS IT WAS GUARANTEED UNDER SUCH OTHER CONTRACT.

G. IF UPON FAILURE TO PROCEED PROMPTLY AFTER NOTICE TO COMPLY WITH THE TERMS OF THE GUARANTEE, THE OWNER MAY HAVE THE DEFECTS CORRECTED AND CONTRACTOR AND HIS SURETY SHALL BE LIABLE FOR ALL EXPENSES INCURRED.

H. THIS CONTRACTOR SHALL OBTAIN IN THE GENERAL CONTRACTOR'S AND OWNER'S NAME, THE STANDARD WRITTEN MANUFACTURER'S GUARANTEE OF ALL MATERIALS FURNISHED UNDER THIS SECTION WHERE SUCH GUARANTEES ARE OFFERED IN THE MANUFACTURER'S PUBLISHED PRODUCT DATA. ALL THESE GUARANTEES SHALL BE IN ADDITION TO, AND NOT IN LIEU OF, OTHER LIABILITIES, WHICH THE CONTRACTOR MAY HAVE BY LAW OR OTHER PROVISIONS OF THE CONTRACT DOCUMENTS. THE GUARANTEE SHALL BE FOR A PERIOD OF ONE (1) YEAR MINIMUM FROM THE DATE OF ACCEPTANCE OR FINAL PAYMENT.

1.11 CLEANING OF SYSTEM

A. THOROUGHLY CLEAN DUCTS, FIXTURES AND EQUIPMENT OF ALL FOREIGN SUBSTANCES INSIDE AND OUT BEFORE PLACING THEM IN OPERATION. ALL AIR HANDLING EQUIPMENT SHALL BE PROVIDED WITH "CONSTRUCTION FILTERS" FOR USE DURING CONSTRUCTION. ONCE CONSTRUCTION IS SUBSTANTIALLY COMPLETE AND PRIOR TO FINAL TESTING ADJUSTING AND BALANCING, FURNISH AND INSTALL NEW FILTERS FOR EACH PIECE OF EQUIPMENT.

B. IF ANY FOREIGN MATTER SHOULD STOP ANY PART OF A SYSTEM AFTER BEING PLACED IN OPERATION, CLEAN AND RECONNECT SYSTEM.

C. EXISTING HVAC SYSTEMS WHICH ARE BEING TIED INTO OR OTHERWISE MODIFIED SHALL BE THOROUGHLY CLEANED AND REFURBISHED PRIOR TO BEING PLACED BACK IN SERVICE.

1. DUCT SYSTEMS SHALL BE CLEANED OF ALL FOREIGN CONTAMINANTS, DUST AND DEBRIS.

2. DURING CONTRACTOR SHALL BRING TO THE ATTENTION OF THE OWNER AND ENGINEER ANY PERCEIVED DEFICIENCIES IN EXISTING SYSTEMS INCLUDING BUT NOT LIMITED TO:

a) CODE DEFICIENCIES

b) INOPERABLE EQUIPMENT

c) LEAKING DUCTWORK AND/OR PIPING

d) MISSING OR DETERIORATING INSULATION

e) EXCESSIVE NOISE

1.12 TEMPORARY OPENINGS

A. COORDINATE CONSTRUCTION AND PROVIDE TEMPORARY OPENINGS IN THE BUILDING AS REQUIRED FOR THE ADMISSION OF EQUIPMENT FURNISHED UNDER THIS DIVISION.

1.13 DEFINITIONS

A. "CONCEALED" MEANS HIDDEN FROM SIGHT IN TRENCHES, CHASES, FURRED SPACES, SHAFTS, HUNG CEILINGS, EMBEDDED IN CONSTRUCTION OR IN CRAWL SPACES.

B. "EXPOSED" MEANS NOT INSTALLED UNDERGROUND OR "CONCEALED" AS DEFINED ABOVE.

C. "PROVIDE" MEANS FURNISH AND INSTALL COMPLETE AND READY TO OPERATE.

1.14 EQUIPMENT DEVIATIONS

A. WHERE PROPOSALS TO USE AN ITEM OF EQUIPMENT OTHER THAN THAT SPECIFIED WHICH REQUIRES ANY REDESIGN OF THE STRUCTURE, PARTITIONS, FOUNDATIONS, PIPING, WIRING OR ANY OTHER PART OF THE MECHANICAL, ELECTRICAL OR ARCHITECTURAL LAYOUT, ALL SUCH REDESIGN, AND ALL NEW DRAWINGS AND DETAILING REQUIRED THEREFORE, SHALL BE PREPARED BY THE ARCHITECT AT THE CONTRACTOR'S EXPENSE.

B. WHERE SUCH APPROVED DEVIATION REQUIRES A DIFFERENT QUANTITY AND ARRANGEMENT OF DUCTWORK, PIPING, WIRING, CONDUIT, AND EQUIPMENT FROM THAT SPECIFIED OR INDICATED ON THE DRAWINGS, FURNISH AND INSTALL ANY SUCH DUCTWORK, PIPING, STRUCTURAL SUPPORTS, INSULATION, CONTROLLERS, MOTORS, STARTERS, ELECTRICAL WIRING AND CONDUIT, AND ANY OTHER ADDITIONAL EQUIPMENT REQUIRED BY THE SYSTEM, AT NO ADDITIONAL COST TO THE OWNER.

1.15 ELECTRICAL ROOM REQUIREMENTS

A. DO NOT INSTALL ANY PIPING, DUCTWORK OR EQUIPMENT IN OR THROUGH ELECTRICAL ROOMS, TRANSFORMER ROOMS, ELECTRICAL CLOSETS, TELEPHONE ROOMS OR ELEVATOR MACHINE ROOMS, UNLESS PIPING OR DUCTWORK OF EQUIPMENT IS INTENDED TO SERVE THESE ROOMS. ADDITIONALLY, NO DUCTWORK OR PIPING WILL BE INSTALLED ABOVE ELECTRIC PANELS. IF THE CONTRACTOR VIOLATES THIS REQUIREMENT, HE SHALL REMOVE AND/OR RELOCATE ALL ITEMS AS REQUIRED AT HIS EXPENSE AND TO THE SATISFACTION OF THE ARCHITECT.

1.16 COOPERATION WITH OTHER TRADES

A. GIVE FULL COOPERATION TO OTHER TRADES AND FURNISH IN WRITING TO THE ARCHITECT ANY INFORMATION NECESSARY TO PERMIT THE WORK OF ALL TRADES TO BE INSTALLED SATISFACTORILY AND WITH THE LEAST POSSIBLE INTERFERENCE OR DELAY.

B. FURNISH TO OTHER TRADES, AS REQUIRED, ALL NECESSARY TEMPLATES, PATTERNS, SETTING PLANS, AND SHOP DETAILS FOR THE PROPER INSTALLATION OF WORK AND FOR THE PURPOSE OF COORDINATING ADJACENT WORK.

1.17 PROJECT RECORD DOCUMENTS:

A. EACH CONTRACTOR SHALL RECORD CLEARLY, NEATLY, ACCURATELY, AND PROMPTLY AS WORK PROGRESSES THE FOLLOWING DATA:

1. CHANGES MADE RESULTING FROM CHANGE ORDERS OR INSTRUCTIONS ISSUED BY THE ARCHITECT.

2. CHANGES IN ROUTING MADE TO AVOID CONFLICT WITH OTHER TRADES OR STRUCTURAL CONDITIONS.

3. FINAL LOCATION OF EQUIPMENT AND PANELS IF DIFFERENT THAN CONTRACT DOCUMENTS.

B. UPON COMPLETION OF THE PROJECT SUBMIT TO THE ARCHITECT A SET OF ELECTRONIC MEDIA NOTING "AS BUILT" CONDITIONS INDICATING ALL VARIATIONS AND DEVIATIONS OF HIS WORK FROM CONTRACT DOCUMENTS.

1.18 PROTECTION

A. PROTECT ALL WORK AND MATERIAL FROM DAMAGE BY WORK AND WORKMEN, AND ACCEPT LIABILITY FOR ALL DAMAGE THUS CAUSED.

B. BE RESPONSIBLE FOR WORK AND EQUIPMENT UNTIL FINALLY INSPECTED, TESTED, AND ACCEPTED. PROTECT WORK AGAINST THEFT, INJURY OR DAMAGE; AND CAREFULLY STORE MATERIAL AND EQUIPMENT RECEIVED ON SITE, WHICH IS NOT IMMEDIATELY INSTALLED. CLOSE OPEN ENDS OF WORK WITH TEMPORARY COVERS OR PLUGS DURING STORAGE AND CONSTRUCTION TO PREVENT ENTRY OF OBSTRUCTING MATERIAL.

C. ALL OPENINGS IN STORED & INSTALLED DUCTWORK SHALL BE COVERED & SEALED WHEN NOT IN USE TO PREVENT CONTAMINATION FROM DUST & DEBRIS.

1.19 SCAFFOLDING, RIGGING AND HOISTING

A. PROVIDE SCAFFOLDING, RIGGING, HOISTING AND SERVICES NECESSARY FOR DELIVERY, ERECTION AND INSTALLATION OF MATERIAL, EQUIPMENT AND APPARATUS FURNISHED UNDER THIS DIVISION. REMOVE SAME FROM PREMISES UPON COMPLETION OF WORK.

B. COORDINATE PROPOSE ROUTING WITH ARCHITECT PRIOR TO RIGGING AND PROTECT ALL EXISTING BUILDING COMPONENTS AGAINST DAMAGE.

1.20 MATERIALS AND WORKMANSHIP

A. ALL MATERIALS AND APPARATUS REQUIRED FOR THE WORK, EXCEPT AS SPECIFICALLY SPECIFIED OTHERWISE, SHALL BE NEW, OF FIRST-CLASS QUALITY, AND SHALL BE FURNISHED, DELIVERED, ERECTED, CONNECTED AND FINISHED IN EVERY DETAIL, AND SHALL BE SO SELECTED AND ARRANGED AS TO FIT PROPERLY INTO THE BUILDING SPACES. WHERE NO SPECIFIC KIND OR QUALITY OF MATERIAL IS GIVEN, A FIRST-CLASS STANDARD ARTICLE AS APPROVED BY THE ARCHITECT SHALL BE FURNISHED.

B. FURNISH THE SERVICES OF AN EXPERIENCED FOREMAN WHO SHALL BE CONSTANTLY IN CHARGE OF THE INSTALLATION OF THE WORK, TOGETHER WITH ALL SKILLED WORKMEN, FITTERS, METAL WORKERS, WELDER, HELPERS, AND LABOR REQUIRED TO UNLOAD, TRANSFER, ERECT, CONNECT, ADJUST, START, OPERATE, AND TEST EACH SYSTEM.

C. ALL EQUIPMENT AND MATERIALS SHALL BE INSTALLED IN STRICT ACCORDANCE WITH THE MANUFACTURER'S RECOMMENDED INSTALLATION INSTRUCTIONS AS WELL AS UL LISTING INSTRUCTIONS AND ALL LOCAL, STATE AND NATIONAL CODES.

1.21 QUIET OPERATION AND VIBRATION

A. WORK SHALL OPERATE UNDER ALL CONDITIONS OF LOAD WITHOUT ANY OBJECTIONABLE SOUND OR VIBRATION. IN CASE OF MOVING MACHINERY, SOUND, OR VIBRATION NOTICEABLE OUTSIDE OF ROOM IN WHICH IT IS INSTALLED, OR ANNOYINGLY NOTICEABLE INSIDE ITS OWN ROOM, WILL BE CONSIDERED OBJECTIONABLE. SOUND OR VIBRATION CONDITIONS CONSIDERED OBJECTIONABLE SHALL BE CORRECTED IN AN APPROVED MANNER AT NO EXPENSE TO THE OWNER. VIBRATION CONTROL SHALL BE MEANS OF APPROVED VIBRATION ELIMINATORS IN A MANNER AS RECOMMENDED BY THE MANUFACTURER OF THE ELIMINATORS.

1.22 ACCESSIBILITY

A. ASSURE AND BE RESPONSIBLE FOR THE ADEQUACY OF SHAFTS AND CHASES, THE ADEQUATE CLEARANCE IN DOUBLE PARTITIONS AND HUNG CEILINGS FOR THE PROPER INSTALLATION OF THE WORK. COOPERATE WITH ALL OTHER TRADES WHOSE WORK IS IN THE SAME SPACE. SUCH SPACES AND CLEARANCES SHALL, HOWEVER, BE KEPT TO THE MINIMUM SIZE REQUIRED.

B. LOCATE ALL EQUIPMENT, WHICH MUST BE SERVICED, OPERATED, ADJUSTED OR MAINTAINED FULLY ACCESSIBLE POSITIONS. EQUIPMENT SHALL INCLUDE, BUT NOT BE LIMITED TO, VALVES, TRAPS, CLEANOUTS, MOTORS, CONTROLLERS, FILTERS, DAMPERS, STARTERS, COILS, FIRE DAMPERS, SMOKE DAMPERS AND DRAIN POINTS. IF REQUIRED FOR BETTER ACCESSIBILITY, FURNISH ACCESS DOORS FOR THIS PURPOSE. MINOR DEVIATIONS FROM DRAWINGS MAY BE MADE TO ALLOW FOR BETTER ACCESSIBILITY, AND THE ENGINEER SHALL APPROVE ANY CHANGE.

C. PROVIDE ACCESS PANELS FOR INSTALLATION IN CONCRETE BLOCK WALLS OR GYPSUM WALLBOARD CEILINGS AND PARTITIONS IN LOCATIONS, WHICH REQUIRE ACCESS FOR SERVICE TO THE ITEMS LOCATED BEHIND THE PERMANENT GYPSUM WALLBOARD OR CONCRETE BLOCK FINISH.

D. ACCESS PANELS SHALL BE INSTALLED WHERE REQUIRED TO GAIN ACCESS TO VALVES, DAMPERS, CONTROLS, ETC. PANELS SHALL BE FLUSH, INSULATED, CONTAIN CONTINUOUS STEEL HINGE AND SCREWDRIVER OPERATED LATCH. PANELS SHALL BE RATED EQUAL TO THE ASSEMBLY THAT THEY ARE BEING INSTALLED IN PANELS SHALL BE UL LISTED.

E. ACCESS PANELS LOCATED IN FIRE RATED PARTITIONS SHALL BE FIRE PANELS. THE FRAME AND PANEL ASSEMBLY OF THESE FIRE PANELS SHALL BE MANUFACTURED UNDER THE FACTORY INSPECTION SERVICE OF THE UNDERWRITERS' LABORATORIES, INC., AND SHALL BEAR A LABEL READING: "FRAME AND FIRE PANEL ASSEMBLY, RATING 2 HOURS. (B) TEMPERATURE RISE 30 MINUTES, 250° F. MAXIMUM." RATED PANELS SHALL BE EQUIPPED WITH AUTOMATIC CLOSING MECHANISM AND BE SELF-LATCHING.

F. PANELS SHALL BE PROVIDED WITH SCREWDRIVER OPERATED FLUSH CAM LOCKS.

G. PANEL SIZE SHALL BE 12 INCHES X 12 INCHES EXCEPT FURNISH A LARGER SIZE IF REQUIRED TO SERVICE A PARTICULAR ITEM. THE EXACT LOCATION AND SIZE OF EACH ACCESS PANEL SHALL BE REVIEWED WITH, AND APPROVED BY, THE ENGINEER.

H. THE EXACT LOCATION AND SIZE OF EACH ACCESS PANEL SHALL BE NOTED ON A SHOP DRAWING AND REVIEWED WITH, AND APPROVED BY, THE ARCHITECT AND ENGINEER IN WRITING PRIOR TO INSTALLATION.

1.23 CUTTING AND PATCHING

A. PROVIDE ALL CUTTING AND PATCHING NECESSARY TO INSTALL THE WORK SPECIFIED IN THIS DIVISION. PATCHING SHALL MATCH ADJACENT SURFACES.

B. AT FLOOR SLABS & WALL OPENINGS TO BE CORED DRILLED OR CUT, CONTRACTOR SHALL FIND AND MARK ON BOTH FACES ALL REINFORCING, REBAR, CONDUITS, UTILITIES, ETC. BY MEANS OF X-RAY PACH-OMETER OR PROF-OMETER. SUBMIT SKETCH SHOWING LOCATIONS OF ALL FINDINGS AND PROPOSED CUTS OR CORES FOR REVIEW.

C. NO STRUCTURAL MEMBERS SHALL BE CUT WITHOUT THE APPROVAL OF THE STRUCTURAL ENGINEER, AND ALL SUCH CUTTING SHALL BE ACCOMPLISHED IN A MANNER DIRECTED BY THE STRUCTURAL ENGINEER.

1.24 GROUNDING

A. ALL COMPONENTS OF MECHANICAL PIPING SYSTEMS SHALL BE PROPERLY GROUNDED TO BUILDING GROUND. WHERE GROUND PATH IS INTERRUPTED BY NON-CONDUCTIVE MATERIALS, APPROPRIATE BONDING OR GROUNDING TO BUILDING GROUND SHALL BE PROVIDED.

1.25 WATERPROOFING

A. WHERE ANY WORK PIERCES WATERPROOFING INCLUDING WATERPROOF CONCRETE, THE METHOD OF INSTALLATION SHALL BE AS APPROVED BY THE ARCHITECT BEFORE WORK IS STARTED. FURNISH ALL NECESSARY SLEEVES REQUIRED.

1.26 DEMOLITION

A. PRIOR TO SUBMITTING BID, VISIT SITE AND IDENTIFY EXISTING CONDITIONS AND DIFFICULTIES THAT WILL AFFECT WORK OF THIS SECTION. DEMOLITION WORK WILL REQUIRE CAREFUL SITE EXAMINATION PRIOR TO BIDDING. NO COMPENSATION WILL BE GRANTED FOR ADDITIONAL WORK CAUSED BY UNFAMILIARITY WITH SITE CONDITIONS THAT ARE VISIBLE OR READILY CONSTRUED BY EXPERIENCED OBSERVERS.

B. PRIOR TO COMMENCING DEMOLITION, CONTRACTOR SHALL IDENTIFY WITH OWNER ANY EQUIPMENT TO BE RETURNED TO THE OWNER AFTER DEMOLITION. ALL OTHER DEBRIS SHALL BE DISPOSED OF BY THIS CONTRACTOR IN ACCORDANCE WITH ALL APPLICABLE REGULATIONS. ANY SHUTDOWNS REQUIRED FOR DEMOLITION SHALL BE COORDINATED WITH BUILDING OWNER TO AVOID IMPACT TO OPERATIONS.

C. DURING DEMOLITION, ANY EQUIPMENT, DUCTWORK, PIPING, ETC. FOUND TO BE ABANDONED SHALL BE DEMOLISHED. EXISTING UNUSED CONNECTIONS TO EXISTING DUCTS OR PIPING SHALL BE CUT BACK TO THE MAINS AND CAPPED ACCORDINGLY.

D. UNDER DEMOLITION, THE FOLLOWING IS, IN BRIEF, THE EXTENT OF THE WORK TO BE PERFORMED BY THE MECHANICAL CONTRACTOR UNDER THIS CONTRACT.

1. THE MECHANICAL CONTRACTOR SHALL BE RESPONSIBLE FOR THE DISCONNECTION AND REMOVAL OF THE EXISTING MECHANICAL EQUIPMENT, DUCTWORK, PIPING, VALVES, ETC.,IN DESIGNATED AREAS. CUT & CAP PIPING AND DUCTWORK BACK TO MAINS. PATCH ALL ROOF AND WALL PENETRATIONS TO MATCH EXISTING.

2. THIS CONTRACTOR SHALL PROTECT WORK AGAINST INJURY OR DAMAGE; AND CAREFULLY STORE MATERIAL AND EQUIPMENT TO BE RELOCATED. OPEN ENDS OF WORK SHALL BE CLOSED WITH TEMPORARY COVERS OR PLUGS DURING STORAGE AND CONSTRUCTION TO PREVENT ENTRY OF OBSTRUCTING MATERIAL.

3. ALL EXISTING HVAC COMPONENTS, INCLUDING BUT NOT LIMITED TO DUCTWORK, PIPING, EQUIPMENT, CONTROLS & ACCESSORIES, SHALL BE REMOVED FROM THE AREA OF RENOVATION.

4. COORDINATE ALL DEMOLITION WITH OTHER TRADES TO ENSURE ALL RELEVANT PORTIONS OF THE SYSTEM INCLUDING ASSOCIATED ELECTRICAL AND PLUMBING COMPONENTS ARE REMOVED.

5. REFER TO DRAWING PLANS AND NOTES FOR ADDITIONAL INFORMATION.

PART 2:PRODUCTS

2.1 USE OF INSTALLATION

A. THE OWNERS SHALL HAVE THE PRIVILEGE OF USING ANY PART OF THE INSTALLATION WHEN SUFFICIENTLY COMPLETE, BUT SUCH USE THEREOF, OR PARTIAL OR FINAL PAYMENT SHALL NOT BE CONSIDERED AS AN ACCEPTANCE OF SUCH WORK IN LIEU OF A WRITTEN CERTIFICATE FROM THE ENGINEER.

2.2 DUCTWORK

A. FABRICATE AND SUPPORT IN ACCORDANCE WITH SMACNA HVAC DUCT CONSTRUCTION STANDARDS - METAL AND FLEXIBLE, AND AS INDICATED. PROVIDE DUCT MATERIAL, GAGES, REINFORCING, SUPPORTS AND SEALING FOR OPERATING PRESSURES INDICATED.

B. DUCT GAUGE SHALL BE AS REQUIRED BY SMACNA DUCT CONSTRUCTION STANDARDS TAKING INTO ACCOUNT DUCT SIZE, SUPPORTS, PRESSURE RATING, AND ANY OTHER RELEVANT PARAMETERS. ALL DUCTWORK, REGARDLESS OF SMACNA STANDARDS, SHALL BE NO THINNER THAN 26 GAUGE.

C. GALVANIZED STEEL DUCTS: ASTM A525 AND ASTM A527 GALVANIZED STEEL SHEET, LOCK-FORMING QUALITY, HAVING G90 ZINC COATING OF IN CONFORMANCE WITH ASTM A90.

1. SEALANT: AS RECOMMENDED BY MANUFACTURER SPECIFICALLY FOR SEALING JOINTS AND SEAMS IN DUCTWORK.

2. NON-HARDENING, WATER RESISTANT, FIRE RESISTIVE, COMPATIBLE WITH MATING MATERIALS; LIQUID USED ALONE OR WITH TAPE, OR HEAVY MASTIC.

3. HANGER ROD: ASTM A36; STEEL, GALVANIZED; THREADED BOTH ENDS, THREADED ONE END, OR CONTINUOUSLY THREADED.

D. HANGER ROD: ASTM A36; STEEL, GALVANIZED; THREADED BOTH ENDS, THREADED ONE END, OR CONTINUOUSLY THREADED.

E. FLEXIBLE DUCTWORK: DUCT SHALL BE FLEXMASTER TYPE 4 INSULATED DUCT AS MANUFACTURED BY BUCKLEY ASSOCIATES OR APPROVED EQUAL.

1. FLEXIBLE DUCT (INSULATED) SHALL BE UNDERWRITERS LABORATORY LISTED (UL 181 CLASS I CONNECTOR) AND CONSTRUCTED IN ACCORDANCE WITH NFPA STANDARDS 90A AND 90B. IT SHALL HAVE A SMOKE/FLAME SPREAD RATING OF 50/25.

2. DUCT FABRIC SHALL BE OF A SMOOTH AIRTIGHT POLYMER FILM MECHANICALLY LOCKED TO THE OUTSIDE HELIX. (USE OF ADHESIVES TO LOCK TO FABRIC IN PLACE IS UNACCEPTABLE.) THE HELIX IS CONSTRUCTED OF CORROSIVE RESISTANT GALVANIZED STEEL, FORMED AND MECHANICALLY LOCKED TO THE DUCT FABRIC ON THE OUTSIDE TO PREVENT TEARING OF THE FLEXIBLE DUCT.

3. INSULATED FLEX SHALL HAVE A FIRE RETARDANT POLYETHYLENE OUTER JACKET WITH A 1/2 LB. DENSITY, 1-1/2" THICK FIBERGLASS INSULATION BLANKET, FACTORY WRAPPED.

4. THE FLEXIBLE DUCT SHALL BE SUPPORTED AS REQUIRED TO PREVENT SAGGING. FLEXIBLE DUCT WITH EXCESSIVE SAGGING WILL NOT BE APPROVED.

5. FLEXIBLE DUCTWORK SHALL BE RATED AT 6" POSITIVE PRESSURE AND 10" NEGATIVE PRESSURE FOR SIZES UP TO 12". NEGATIVE PRESSURE FOR 14" TO 16" SHALL BE 5". NEGATIVE PRESSURE FOR 18" SHALL BE 1".

6. LENGTH OF INSTALLED FLEXIBLE DUCT SHALL NOT EXCEED 6'-0" IN DEVELOPED LENGTH.

F. FLEXIBLE CONNECTIONS

1. FLEXIBLE CONNECTIONS SHALL BE PROVIDED WHER

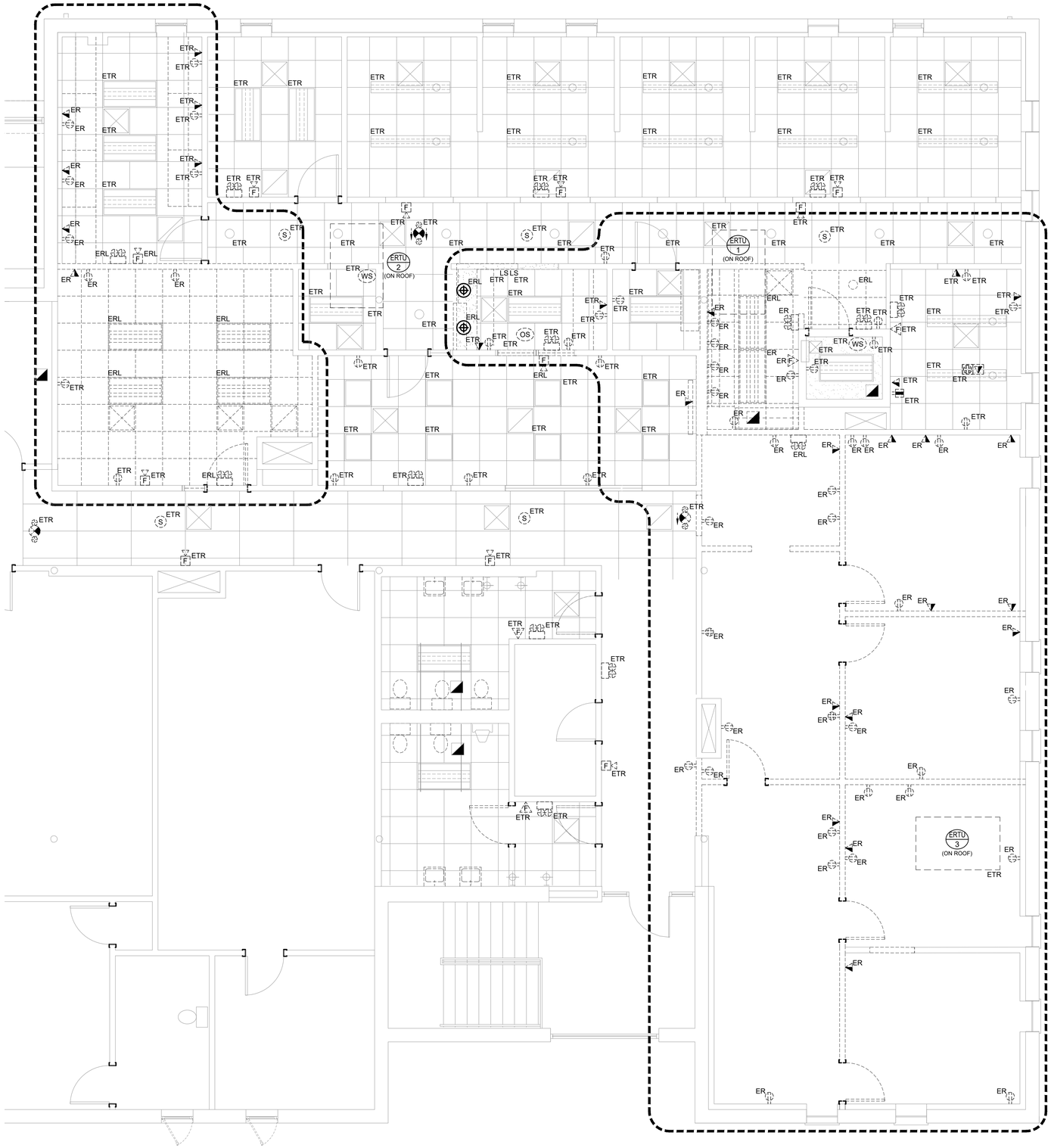

NORTH

ELECTRICAL - SECOND FLOOR DEMOLITION PLAN
1/4" = 1'-0"

castellone architecture
792 great road
lincoln, ri 02865
401-465-9861

ENGINEERING DESIGN SERVICES INCORPORATED
141 Dyer Street, Providence, RI 02903
Tel (401) 765-7439 Fax (401) 765-2984

DRAWN BY: ARM
JUNE 12, 2026
REVISIONS:

DENTAL CLINIC 2ND FLOOR ALTERATIONS

TRI-COUNTY COMMUNITY ACTION AGENCY
1126 HARTFORD AVENUE
JOHNSTON, RI 02919

ELECTRICAL
SECOND FLOOR
DEMOLITION PLAN

ED1-1

BID SET

WIRING DEVICE LEGEND

I.G.	DUPLEX CONVENIENCE OUTLET; 125 VOLT, 20 AMPERE, U-SLOT GROUNDING TYPE. "I.G." DENOTES ISOLATED GROUND. SEE DETAIL ON SHEET "E200" FOR MORE INFORMATION.	18" A.F.F.
	DUPLEX CONVENIENCE OUTLET; 125 VOLT, 20 AMPERE, U-SLOT GROUNDING TYPE.	42" A.F.F. OR 6" ABOVE COUNTER
	DEDICATED DUPLEX CONVENIENCE OUTLET; 125 VOLT, 20 AMPERE, U-SLOT GROUNDING TYPE.	18" A.F.F.
	DUPLEX CONVENIENCE OUTLET; 125 VOLT, 20 AMPERE, U-SLOT GROUNDING TYPE WITH GROUND FAULT PROTECTION.	18" A.F.F.
I.G.	DUPLEX CONVENIENCE OUTLET; 125 VOLT, 20 AMPERE, U-SLOT GROUNDING TYPE WITH GROUND FAULT PROTECTION. "I.G." DENOTES ISOLATED GROUND. SEE DETAIL ON SHEET "E200" FOR MORE INFORMATION.	42" A.F.F. OR 6" ABOVE COUNTER
	SPECIAL NEMA CONFIGUATION OUTLET; VERIFY NEMA TYPE WITH EQUIPMENT TO BE SERVED.	--
	SINGLE CONVENIENCE OUTLET; 125 VOLT, 20 AMPERE, U-SLOT GROUNDING TYPE.	18" A.F.F.
	QUADRUPLEX CONVENIENCE OUTLET; 125 VOLT, 20 AMPERE, U-SLOT GROUNDING TYPE.	18" A.F.F.
W	COMBINATION TELEPHONE/DATA OUTLET; PROVIDE 3/4"C. (EMT) WITH PULL STRING FROM OUTLET TO ABOVE DROP CEILING."W" INDICATES WALL MOUNTED TELEPHONE MOUNTED PER ARCHITECT'S DIRECTION. EACH OUTLET SHALL BE PROVIDED WITH (3) CATEGORY 6 CABLES PER THE OWNER'S SPECIFICATIONS.	18" A.F.F.
TV	TELEVISION OUTLET. E.C. SHALL PROVIDE RECESSED BACKBOX WITH 3/4" CONDUIT WITH PULL STRING BOX TO ABOVE DROP CEILING WITHIN THE BUILDING. PROVIDE BUSHED END CAPS TO ALL CONDUITS.	78" A.F.F.
	RECESSED FLOOR-BOX / POKE-THRU IN FLOOR WITH QUAD-RUPLEX CONVENIENCE OUTLET; 125 VOLT, 20 AMPERE, U-SLOT GROUNDING TYPE WITH COMMUNICATIONS TEL./DATA FEED (MINIMUM 2" CONDUIT). VERIFY EXACT ELECTRICAL CONNECTION REQUIREMENTS.	FLOOR
	RECESSED FLOOR-BOX / POKE-THRU IN CEILING WITH QUAD-RUPLEX CONVENIENCE OUTLET; 125 VOLT, 20 AMPERE, U-SLOT GROUNDING TYPE (MINIMUM 2" CONDUIT). VERIFY EXACT ELECTRICAL CONNECTION REQUIREMENTS.	CEILING
J	JUNCTION BOX; SIZE AS REQUIRED PER CODE.	
	MOTOR; REFER TO PLANS FOR DETAILS.	
	RECESSED MOUNTED PANELBAORD; 240Y/120V, 1-PHASE, 3-WIRE. REFER TO DRAWINGS FOR ADDITIONAL INFORMATION.	MOUNT 6'-6" AFF TO TOP BREAKER.
	SURFACE MOUNTED PANELBOARD; 240Y/120V, 1-PHASE, 3-WIRE. REFER TO DRAWINGS FOR ADDITIONAL INFORMATION.	MOUNT 6'-6" AFF TO TOP BREAKER.
	GROUNDING CONDUCTOR / MEANS & METHOD; IN ACCORDANCE WITH THE *"NATIONAL ELECTRIC CODE"*, (NEC). REFER TO PLANS FOR SIZING.	-

NOTES:

1. THE ELECTRICAL CONTRACTOR SHALL COORDINATE WITH THE G.C. FOR WALLS BEING FURRED-OUT WITH SHEETROCK DRYWALL SO OUTLET BOXES & DEVICES CAN BE INSTALLED FLUSH WITHIN THE WALLS. (TYPICAL)
2. ALL RECEPTACLES SHALL BE PROVIDED WITH AN ADHERED, TYPED LABEL INDICATING PANEL NAME AND CIRCUIT NUMBER. HANDWRITTEN LABELS WILL NOT BE ACCEPTED.
3. ALL RECEPTACLES WITH A DEDICATED CIRCUIT SHALL BE LABELED WITH PANEL NAME AND CIRCUIT NUMBER AS INDICATED IN NOTE #3 AS WELL AS LABELED "DEDICATED".
4. ALL COLORS OF RECEPTACLES AND ASSOCIATED FACEPLATES TO BE CONFIRMED WITH OWNER'S REPRESENTATIVE AND LOCAL (AHJ) PRIOR TO ANY SUBMITTALS, PURCHASE AND/OR INSTALLATION OF EQUIPMENT. THIS REQUIREMENT AS INDICATED IN THESE NOTES SHALL BE CORRECTED AS REQUIRED.
5. ALL TYPES AND LOCATIONS OF RECEPTACLES TO BE CONFIRMED WITH OWNER'S REPRESENTATIVE AND LOCAL (AHJ) PRIOR TO ANY SUBMITTALS, PURCHASE AND/OR INSTALLATION OF EQUIPMENT. FAILURE OF THIS REQUIREMENT AS INDICATED IN THESE NOTES SHALL BE CORRECTED AS REQUIRED.
6. ANY CONFLICT WITH RECEPTACLE LOCATIONS, TYPES OF RECEPTACLES OR COLORS OF RECEPTACLES WITH OWNER'S REPRESENTATIVE OR WILL BE THE RESPONSIBILITY OF THE ELECTRICAL CONTRACTOR, AND GENERAL CONTRACTOR TO PROVIDE ALL ADDITIONAL WORK AND EXPENSES TO REPAIR AND CORRECT. NO ADDITIONAL REIMBURSEMENTS OR TIME OF COMPLETION FOR WORK WILL BE ALLOWED.
7. IT SHALL BE THIS CONTRACTOR'S RESPONSIBILITY TO COORDINATE WITH LOCAL (AHJ) FOR ALL INSTALLATIONS AND REQUIREMENTS.

RECEPTACLE BRANCH CIRCUIT WIRING SCHEDULE

CONDUCTOR AWG.	MAXIMUM CONDUCTOR LENGTH AT 120V	GROUND CONDUCTOR AWG.
#12	100'-0"	#12
#10	165'-0"	#10
#8	255'-0"	#10
#6	405'-0"	#10

RECEPTACLE BRANCH CIRCUIT WIRING SCHEDULE NOTES:

1. BASED ON 20A CIRCUIT LOADED TO 9A USING SINGLE PHASE, 2 WIRE CIRCUITS.
2. THE ABOVE SCHEDULE REPRESENTS MINIMUM CONDUCTOR SIZE BASED FROM PANEL TO CENTER OF LEAD TO OVERCOME VOLTAGE DROP.
3. MAKE PROVISIONS FOR JUNCTION BOX ADJACENT TO OUTLET TO TRANSITION TO #12 WIRE FOR FINAL TERMINATIONS TO DEVICE AS REQUIRED.

TYPICAL ELECTRICAL NOTES

1. FURNISH LABOR, MATERIALS, EQUIPMENT AND SERVICES NECESSARY FOR THE PROPER AND COMPLETE INSTALLATION OF ALL ELECTRIC WORK SHOWN ON THE DRAWINGS AND HEREIN SPECIFIED.
2. ALL ITEMS NOT SHOWN ON THE DRAWINGS OR CALLED FOR IN THE SPECIFICATIONS, BUT WHICH ARE NECESSARY TO MAKE A COMPLETE ELECTRICAL INSTALLATION, SHALL BE FURNISHED AND INSTALLED AS PART OF THIS PROJECT.
3. ALL ELECTRICAL INSTALLATIONS AND GROUNDING SHALL BE IN STRICT ACCORDANCE WITH THE LATEST REQUIREMENTS OF THE LOCAL, STATE AND NATIONAL CODES.
4. OBTAIN AND PAY FOR ALL REQUIRED PERMITS AND INSPECTIONS.
5. MATERIALS AND WORKMANSHIP SHALL BE THE BEST OF THEIR RESPECTIVE KIND AND IN FULL ACCORDANCE WITH THE MOST MODERN ELECTRICAL CONSTRUCTION STANDARDS. ALL MATERIAL SHALL BE NEW, UNLESS OTHERWISE NOTED AND FREE OF ANY DEFECTS.
6. THE ELECTRICAL CONTRACTOR SHALL CLEAN AT THE END OF EACH DAY ALL AREAS WORKED IN. EMPTY BOXES, RUBBISH, AND OTHER CONSTRUCTION MATERIALS OF NO USE SHALL BE REMOVED FROM THE BUILDING.
7. ALL WORK SEQUENCES SHALL BE COORDINATED WITH THE G.C. AND SHALL BE COORDINATION WITH OTHER BUILDING TRADES AND G.C. BUILDING SCHEDULES.
8. ALL BRANCH CIRCUITS RATED AT 120 VOLTS, 20 AMPERES EXCEEDING 75 FEET SHALL BE MINIMUM #10 AWG.
9. THE ELECTRICAL CONTRACTOR (E.C.) SHALL COORDINATE WITH THE LOCAL UTILITY POWER COMPANY AND PROVIDE ALL MATERIAL & LABOR REQUIRED TO COMPLY WITH THE UTILITY POWER COMPANY'S REQUIREMENTS AND STANDARDS, PRIOR TO ORDERING ANY ELECTRICAL EQUIPMENT, SUCH AS, SWITCHGEAR, PANELS, TRANSFORMERS, DISCONNECT SWITCHES, ETC... E.C. SHALL CONFIRM METERING SEQUENCE (HOT OR COLD) AND MAKE THE APPROPRIATE PROVISIONS FOR THE APPROVED METERING SEQUENCE ARRANGEMENT. A.I.C. RATINGS, GROUNDING, BONDING, RACEWAYS, ETC... SHALL BE IN ACCORDANCE WITH THE UTILITY COMPANY'S STANDARDS.
10. THE ELECTRICAL CONTRACTOR (E.C.) SHALL COORDINATE WITH THE LOCAL TELEPHONE COMPANY AND PROVIDE ALL MATERIAL & LABOR REQUIRED TO COMPLY WITH THE TELEPHONE COMPANY'S REQUIREMENTS AND STANDARDS, PRIOR TO ODERING ANY ELECTRICAL EQUIPMENT, SUCH AS, TERMINAL BOARDS, GROUNDING, RACEWAYS, ETC...
11. ALL RECEPTACLE WITH "WP" DESIGNATION SHALL BE PROVIDED WITH A WEATHER-PROOF WHILE IN-USE ENCLOSURE. (TYPICAL)
12. ELECTRICAL CONTRACTOR TO ALLOW TIME FOR DIRECTIONAL ADJUSTMENT OF ALL LIGHT FIXTURES AS DIRECTED BY OWNER.
13. ALL RECEPTACLES SHALL BE LABELED INDICATING THEIR RESPECTIVE PANEL & CIRCUIT NUMBER.
14. AT EXISTING FLOOR SLABS AND WALLS TO BE CORE-DRILLED OR CUT, THE CONTRACTOR SHALL FIND AND MARK ALL EXISTING REINFORCING, PIPING, CONDUIT & FEEDERS, ETC IN BOTH FACES LOCATED BY MEANS OF X-RAY, PACH-OMETER, OR PROFOMETER. SUBMIT DRAWING SHOWING LOCATIONS OF EXISTING REBAR, PIPING AND/OR CONDUIT AND PROPOSED CORES AND/OR CUTS FOR REVIEW.
15. ALL PENETRATIONS FOR POWER RECEPTACLES, JUNCTION BOXES, TELEPHONE/DATA OUTLETS, SWITCHES, BACKBOXES, ETC.. LOCATED IN EXTERIOR WALLS SHALL BE PROVIDED WITH APPROPRIATE CAULKING AND GASKETS TO SEAL OFF AND PREVENT AIR LEAKAGE. FOLLOW CAULKING AND GASKET MANUFACTURERS INSTALLATION GUIDELINES TO ENSURE CORRECT AND EFFECTIVE INSTALLATION.

ABBREVIATIONS

A	AMPERES
ADA	AMERICANS WITH DISABILITIES ACT
AMPS	AMPERES
AFF	ABOVE FINISHED FLOOR
A/C	AIR CONDITIONING
AWG	AMERICAN WIRE GAGE
C	CONDUIT
C/B	CIRCUIT BREAKER
CF	COMPACT FLUORESCENT
CLG	CEILING
℄	CENTERLINE
DN	DOWN
DWG	DRAWING
E.C.	ELECTRICAL CONTRACTOR
EQ	EQUAL
ETR	EXISTING TO REMAIN
ER	EXISTING TO BE REMOVED
ERL	EXISTING TO BE RE-LOCATED
F.A.	FIRE ALARM
FACP	FIRE ALARM CONTROL PANEL
FLR	FLOOR
G.C.	GENERAL CONTRACTOR
GFCI	GROUND FAULT CIRCUIT INTERUPTER.
G	GROUND
GND	GROUND
HVAC	HEATING, VENTILATING, & & AIR CONDITIONING
I.G.	ISOLATED GROUND
JB	JUNCTION BOX
KVA	KILOVOLT-AMPERES
KW	KILOWATT
LTG	LIGHTING
MAX	MAXIMUM
M.C.	MECHANICAL CONTRACTOR
MECH	MECHANICAL
MIN	MINIMUM
MTD	MOUNTED
NAC	F.A. NOTIFICATION APPLIANCE CIRCUIT EXPANDER PANEL
NEC	NATIONAL ELECTRICAL CODE
NTS	NOT TO SCALE
P	POLE
P.C.	PLUMBING CONTRACTOR
PNL	PANEL
RE	RE-LOCATED DEVICE OR EQUIPMENT SHOWN IN NEW LOCATION
TYP	TYPICAL
UL	UNDERWRITERS LABATORY
UON	UNLESS OTHERWISE NOTED
UPS	UNINTERRUPTIBLE POWER SUPPLY
V	VOLTS
W	WATTS
WP	WEATHER-PROOF

SEISMIC RESTRAINT NOTE

A. GENERAL: IT IS THE INTENT OF THIS SEISMIC SPECIFICATION TO KEEP ALL ELECTRIAL BUILDING SYSTEM COMPONENTS IN PLACE DURING A SEISMIC EVENT. ALL ELECTRICAL SYSTEMS MUST BE INSTALLED IN STRICT ACCORDANCE WITH SEISMIC CODES, COMPONENT MANUFACTURER'S AND BUILDING CONSTRUCTION STANDARDS. WHENEVER A CONFLICT OCCURS BETWEEN THE MANUFACTURER'S OR CONSTRUCTION STANDARDS, THE MOST STRINGENT SHALL APPLY.

B. THIS CONTRACTOR SHALL ENGAGE A PROFESSIONAL STRUCTURAL ENGINEER REGISTERED IN THE JURISDICTION OF THIS PROJECT TO REVIEW THE ENTIRE INSTALLATION TO DETERMINE ALL SEISMIC RESTRAINT REQUIREMENTS AND METHODS. CONTRACTOR SHALL SUBMIT A REPORT OUTLINING THE STRUCTURAL ENGINEER'S REVIEW AS WELL AS SEISMIC RESTRAINT SHOP DRAWINGS AND SUPPORTING CALCULATIONS PREPARED BY THE PROFESSIONAL STRUCTURAL ENGINEER FOR REVIEW BY THE ARCHITECT.

C. SEISMIC RESTRAINTS SHALL BE DESIGNED IN ACCORDANCE WITH SEISMIC FORCE LEVELS AS DETAILED IN THE APPLICABLE BUILDING CODE.

1. ALL EQUIPMENT, CONDUIT AND PULL BOXES SHALL BE ADEQUATELY RESTRAINED TO RESIST SEISMIC FORCES. RESTRAINT DEVICES SHALL BE DESIGNED AND SELECTED TO MEET SEISMIC REQUIREMENTS AS DEFINED IN THE LATEST ISSUE OF THE BOCA NATIONAL BUILDING CODE IN ACCORDANCE WITH THE APPLICABLE SEISMIC ZONE.
2. ANCHOR BOLT CALCULATORS, SIGNED AND STAMPED BY A REGISTERED PROFESSIONAL ENGINEER, SHALL BE SUBMITTED SHOWING ADEQUACY OF THE BOLT SIZING AND TYPE. STAMPED CALCULATIONS SHALL ALSO BE FURNISHED FOR ANCHORS ON RESTRAINT DEVICES, CABLES, ISOLATORS AND RIGIDLY MOUNTED EQUIPMENT.

LIGHTING CONTROL LEGEND

SYMBOL	DESCRIPTION	MOUNTING
SM	MANUAL MOTOR RATED TOGGLE SWITCH WITH THERMAL OVERLOADS.	48" A.F.F.
Sa	SINGLE POLE SWITCH; "a" INDICATES LIGHT FIXTURES CONTROLLED.	48" A.F.F.
S3a	THREE-WAY SWITCH; "a" INDICATES LIGHT FIXTURES CONTROLLED.	48" A.F.F.
SDa	SINGLE POLE DIMMER SWITCH; "a" INDICATES LIGHTING FIXTURES CONTROLLED.	48" A.F.F.
SD3a	THREE-WAY DIMMER SWITCH; "a" INDICATES LIGHTING FIXTURES CONTROLLED.	48" A.F.F.
WS	WALL SWITCH VACANCY SENSOR (AUTOMATIC "ON" AND AUTOMATIC "OFF") MFR: nLIGHT CONTROLS #nWSX-PDT-LV. INSTALL PER MANUFACTURERS INSTRUCTIONS.	48" A.F.F.
WSD	DIMMABLE WALL SWITCH VACANCY SENSOR (AUTOMATIC "ON" AND AUTOMATIC "OFF") MFR: VIVE CONTROLS #nWSX-PDT-LV-DX. INSTALL PER MANUFACTURERS INSTRUCTIONS.	48" A.F.F.
LS	SINGLE POLE LOW VOLTAGE SWITCH. MFR: nLIGHT CONTROLS #nPODMA. COORDINATE WITH MANUFACTURER FOR COMPATIBILITY WITH LIGHTING FIXTURES.	48" A.F.F.
LVD	SINGLE POLE LOW VOLTAGE DIMMER SWITCH. MFR: nLIGHT CONTROLS #nPODMA-DX. COORDINATE WITH MANUFACTURER FOR COMPATIBILITY WITH LIGHTING FIXTURES.	48" A.F.F.
PPa	POWER PACK FOR VACANCY SENSORS. MFR: nLIGHT CONTROLS #nPP16-X. WIRE PER MANUFACTURERS INSTRUCTIONS FOR MANUAL "ON" WITH WALL LOW VOLTAGE SWITCH AND AUTOMATIC "OFF" WITH SENSOR. "a" INDICATES SWITCH LEG TO BE CONTROLLED.	CEILING
DTC	TOUCH SCREEN LOW VOLTAGE DIGITAL TIME CLOCK. MFR: nLIGHT CONTROLS #nDTC. COORDINATE WITH MANUFACTURER FOR COMPATIBILITY WITH LIGHTING FIXTURES.	48" A.F.F.
OSa	DUAL TECHNOLOGY OCCUPANCY SENSOR. MFR: nLIGHT CONTROLS #nCM PDT SERIES. PROVIDE POWER PACK "nPP16-X" FOR EACH SWITCH LEG CONTROLLED BY OCCUPANCY SENSOR. WIRE TO POWER PACK PER MANUFACTURERS INSTRUCTIONS FOR AUTOMATIC "ON" WITH WALL SWITCH AND AUTOMATIC "OFF" WITH SENSOR. SET DELAY TIMES FOR 15 MINUTES. SET SENSOR SO THAT ONLY ONE TECHNOLOGY IS NEEDED TO KEEP LIGHTS ON. "a" INDICATES SWITCH LEG TO BE CONTROLLED.	CEILING
VSa	DUAL TECHNOLOGY VACANCY SENSOR. MFR: nLIGHT CONTROLS #nCM PDT SERIES. PROVIDE POWER PACK "nPP16-X" FOR EACH SWITCH LEG CONTROLLED BY VACANCY SENSOR. WIRE TO POWER PACK PER MANUFACTURERS INSTRUCTIONS FOR MANUAL "ON" WITH WALL SWITCH AND AUTOMATIC "OFF" WITH SENSOR. SET DELAY TIMES FOR 15 MINUTES. SET SENSOR SO THAT ONLY ONE TECHNOLOGY IS NEEDED TO KEEP LIGHTS ON. "a" INDICATES SWITCH LEG TO BE CONTROLLED.	CEILING

NOTES:

- E.C. SHALL FURNISH AND INSTALL ALL DEVICES AND ACCESSORIES FOR A COMPLETE LIGHTING CONTROL INSTALLATION.
- COORDINATE EXACT REQUIREMENTS FOR INSTALLATION WITH LIGHTING CONTROL REPRESENTATIVE.
- PROVIDE ALL LOW VOLTAGE CABLING REQUIRED FOR CONTROLS.

CONTACT REPRESENTATIVE *BRETT DAHLGARD* AT (203) 410-3320 FOR QUESTIONS OR CLARIFICATIONS.

COORDINATION NOTES

CONTRACTOR SHALL PROVIDE A SET OF COORDINATION DRAWING'S WITH ALL TRADES EQUIPMENT LOCATED, INDICATING ANY / ALL CONFLICTS WITH THE CURRENT ELECTRICAL DESIGN PRIOR TO THE START OF ANY WORK. THESE PLANS SHALL INCLUDE ARCHITECTURAL ELEVATION & DETAIL DRAWINGS WITH PROPOSED ELECTRICAL EQUIPMENT LOCATED FOR REVIEW AND APPROVAL. ANY COORDINATION ISSUES WITH EQUIPMENT, PRIOR TO THESE PLANS BEING APPROVED SHALL BE REPAIRED AT THIS CONTRACTOR'S EXPENSE.

ALL LOCATIONS & MOUNTING HEIGHTS OF ELECTRICAL DEVICES (LIGHTING, RECEPTACLES, FIRE ALARM, LIFE SAFETY DEVICES, ETC.) SHALL BE COORDINATED AND APPROVED BY ARCHITECT PRIOR TO ANY INSTALLATION. ANY DEVIATION FROM THIS REQUIREMENT RESULTING IN AN INCORRECT INSTALLATION OR LOCATION SHALL BE REPAIRED BY THIS CONTRACTOR AT THEIR OWN EXPENSE.

LUMINAIRE BRANCH CIRCUIT WIRING SCHEDULE

CONDUCTOR AWG.	MAXIMUM CONDUCTOR LENGTH AT 120V	MAXIMUM CONDUCTOR LENGTH AT 277V	GROUND CONDUCTOR AWG.
#12	75'-0"	175'-0"	#12
#10	120'-0"	285'-0"	#10
#8	190'-0"	445'-0"	#10
#6	300'-0"	-	#10

RECEPTACLE BRANCH CIRCUIT WIRING SCHEDULE NOTES:

1. BASED ON 20A CIRCUIT LOADED TO 9A USING SINGLE PHASE, 2 WIRE CIRCUITS.
2. THE ABOVE SCHEDULE REPRESENTS MINIMUM CONDUCTOR SIZE BASED FROM PANEL TO CENTER OF LEAD TO OVERCOME VOLTAGE DROP.
3. MAKE PROVISIONS FOR JUNCTION BOX ADJACENT TO OUTLET TO TRANSITION TO #12 WIRE FOR FINAL TERMINATIONS TO DEVICE AS REQUIRED.

XXX / ## — MECHANICAL EQUIPMENT CONNECTION TAG:

REFER TO "MECHANICAL EQUIPMENT ELECTRICAL CONNECTION SCHEDULE" ON SHEET "E200" FOR ALL CIRCUITING INFORMATION, INCLUDING BUT NOT LIMITED TO BRANCH CIRCUITING WIRING AND CONDUIT SIZE, VOLTAGE, PHASE, MOTOR CONTROL, DISC. SWITCH & CIRCUIT BREAKER.

castellone architecture
792 great road
lincoln, ri 02865
401-465-9861

CDS ENGINEERING DESIGN SERVICES INCORPORATED
141 Kenyon Avenue, Warwick, Rhode Island 02889
Tel (401) 765-7450 Fax (401) 765-2994

DRAWN BY: ARM
JUNE 12, 2026
REVISIONS:

DENTAL CLINIC 2ND FLOOR ALTERATIONS

TRI-COUNTY COMMUNITY ACTION AGENCY
1126 HARTFORD AVENUE
JOHNSTON, RI 02919

ELECTRICAL LEGENDS & NOTES

E0-1

BID SET

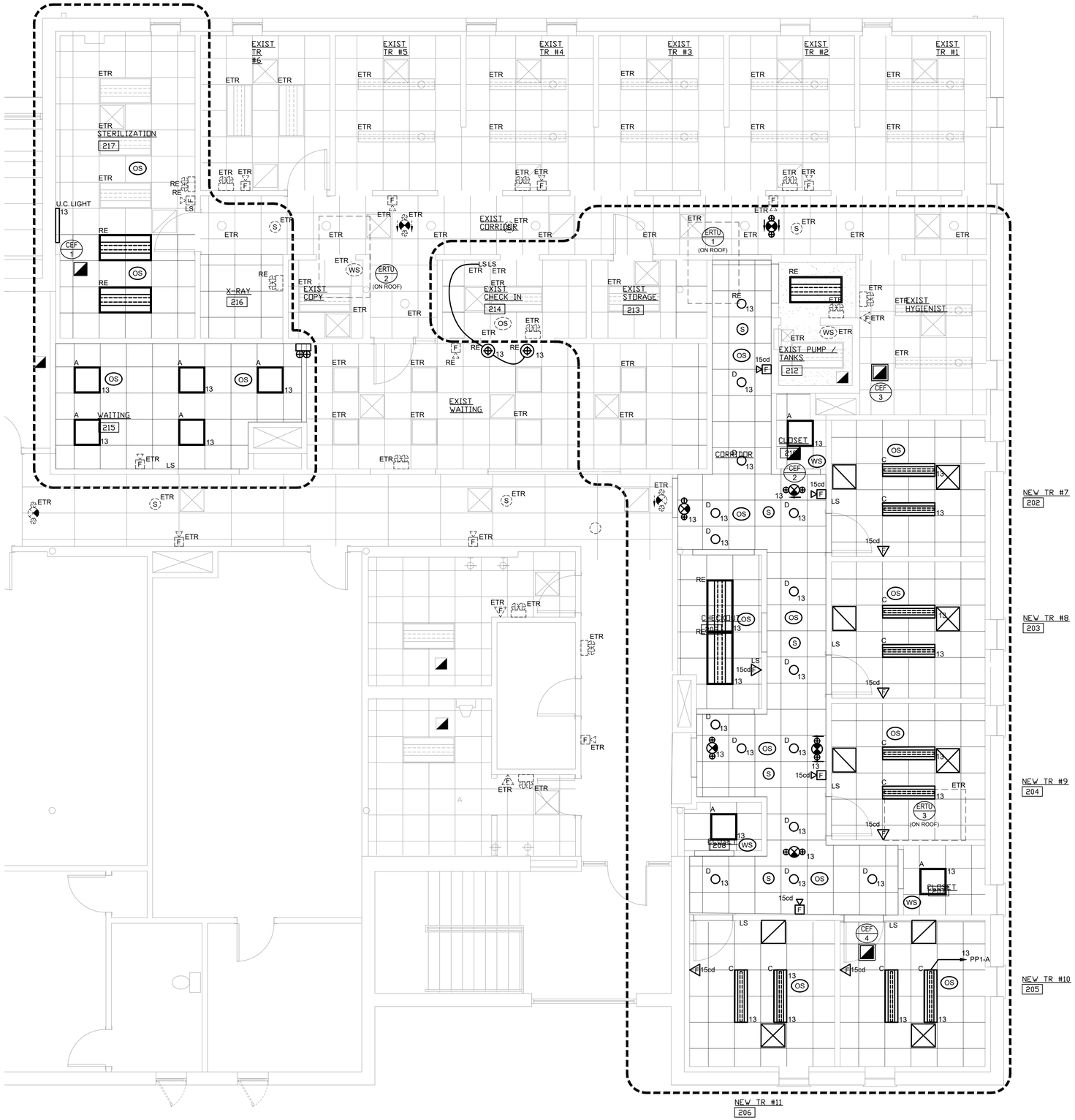

NORTH

ELECTRICAL - SECOND FLOOR PLAN

1/4" = 1'-0"

castellone architecture
792 great road
lincoln, ri 02865
401-465-9861

CDS ENGINEERING DESIGN SERVICES INCORPORATED
141 Wampanoag Trail, East Providence, RI 02915
Tel (401) 765-7439 Fax (401) 765-2984

DRAWN BY: ARM
JUNE 12, 2026
REVISIONS:

DENTAL CLINIC 2ND FLOOR ALTERATIONS

TRI-COUNTY COMMUNITY ACTION AGENCY
1126 HARTFORD AVENUE
JOHNSTON, RI 02919

ELECTRICAL
SECOND FLOOR
PLAN

E1-1

BID SET

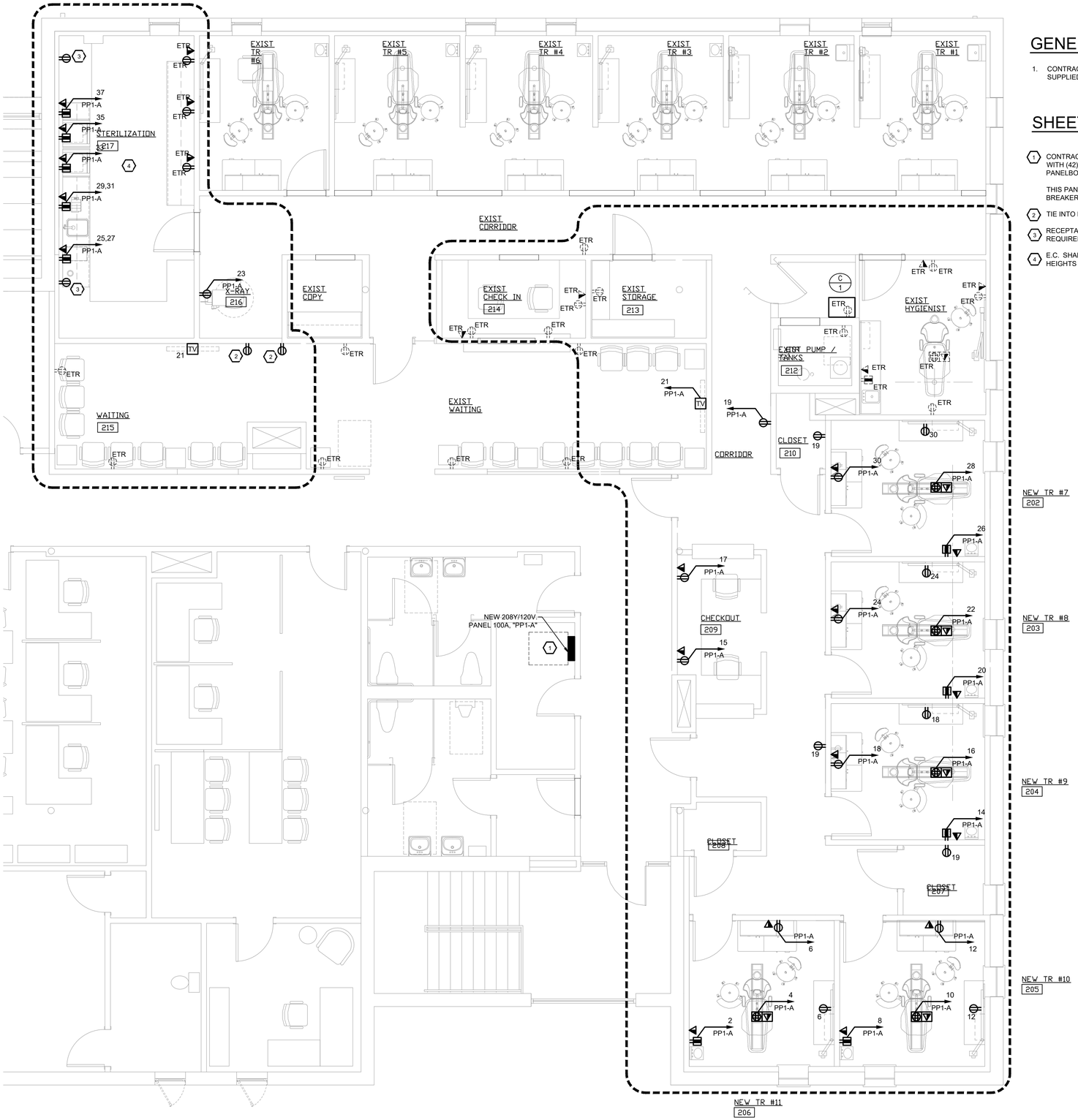

NORTH

ELECTRICAL - SECOND FLOOR PLAN
1/4" = 1'-0"

GENERAL NOTE:

1. CONTRACTOR TO VERIFY ELECTRICAL REQUIREMENTS AND ROUGH-IN LOCATIONS WITH VENDOR SUPPLIED EQUIPMENT.

SHEET KEYED NOTES:

1. CONTRACTOR SHALL PROVIDE AND INSTALL NEW 100A 208Y/120V, 3 PHASE, 4 WIRE, PANELBOARD "PP1A" WITH (42) 20A/1P BREAKERS AND FED BY A NEW 70A/3P BREAKER WITHIN AN EXISTING 208Y/120V PANELBOARD "A" VIA 4#4 & 1#8GND., 1"C. COORDINATE EXACT LOCATION IN FIELD.

   THIS PANEL SHALL BE UTILIZED IF QUANTITY OF NEW HOME RUNS EXCEEDS QUANTITY OF EXISTING SPARE BREAKERS WITHIN EXISTING PANELS.
2. TIE INTO EXISTING WAITING ROOM AREA CIRCUITRY.
3. RECEPTACLE ABOVE UPPER CABINETS FOR LIGHTING TO BE PROVIDED BY OTHERS. COORDINATE EXACT REQUIREMENTS WITH OWNER AND ARCHITECT.
4. E.C. SHALL COORDINATE EXACT EQUIPMENT LOCATIONS AND POWER REQUIREMENTS AND MOUNTING HEIGHTS IN FIELD WITH OWNER PRIOR TO ROUGH-IN.

castellone architecture
792 great road
lincoln, ri 02865
401-465-9861

ENGINEERING DESIGN SERVICES INCORPORATED
141 Mineral Spring Avenue, Pawtucket, RI 02860
Tel (401) 765-7649 Fax (401) 765-2994

DRAWN BY: ARM
JUNE 12, 2026
REVISIONS:

DENTAL CLINIC 2ND FLOOR ALTERATIONS

TRI-COUNTY COMMUNITY ACTION AGENCY
1126 HARTFORD AVENUE
JOHNSTON, RI 02919

ELECTRICAL
SECOND FLOOR
PLAN

E1-2

BID SET

ELECTRICAL KEYED NOTES:

1. ELECTRICAL CONTRACTOR SHALL COORDINATE THE FINAL SELECTION AND LOCATION OF ALL LIGHTING FIXTURES WITH THE ARCH. AND OWNER PRIOR TO ANY INSTALLATION.
2. IT SHALL BE THE ELECTRICAL CONTRACTOR'S RESPONSIBILITY TO FIELD VERIFY THE LOCATION OF ALL EXISTING PANELBOARDS. THE ELECTRICAL CONTRACTOR SHALL PROVIDE THE NECESSARY BREAKERS INDICATED ON THIS DRAWING AND ON THE MECHANICAL EQUIPMENT SCHEDULE SHOWN ON DWG. "E2." PROVIDED BREAKERS SHALL MATCH THE ELECTRICAL CHARACTERISTICS OF THE EXISTING PANELBOARD(S).
3. ELECTRICAL CONTRACTOR SHALL COORDINATE THE FINAL LOCATION OF ALL MECHANICAL AND PLUMBING EQUIPMENT WITH TRADE SPECIFIC CONTRACTORS AND PLANS/DRAWINGS.
4. ALL PROPOSED LIGHTING SHALL BE FED FROM THE CLOSEST AVAILABLE 20A/1P BREAKER/SPACE. E.C. SHALL FIELD VERIFY THE ALL EXISTING PANELBOARDS AND AVAILABLE SPARE CIRCUITS TO GAIN A PROPER UNDERSTANDING OF THE SCOPE OF WORK.
5. ELECTRICAL CONTRACTOR SHALL PROVIDE FOUR (4) GFCI RECEPTACLES LOCATED 6" ABOVE THE COUNTER LOCATED IN THE BATHROOM. THE FINAL LOCATION OF THE RECEPTACLES SHALL BE COORDINATED WITH THE OWNER PRIOR TO ANY INSTALLATION. PROPOSED RECEPTACLES SHALL BE FED FROM THE CLOSEST AVAILABLE 20A/1P BREAKER/SPACE. E.C. SHALL FIELD VERIFY THE ALL EXISTING PANELBOARDS AND AVAILABLE SPARE CIRCUITS TO GAIN A PROPER UNDERSTANDING OF THE SCOPE OF WORK.
6. E.C. SHALL PROVIDE WEATHERPROOF WALLPACKS ALONG THE EXTERIOR OF THE BUILDING. E.C. TO FIELD VERIFY THE FINAL MOUNTING LOCATION WITH THE G.C. PRIOR TO INSTALLATION. E.C. SHALL TIE PROPOSED FIXTURES INTO THE CLOSEST AVAILABLE 20A/1P BREAKER/SPACE. E.C. SHALL FIELD VERIFY THE ALL EXISTING PANELBOARDS AND AVAILABLE SPARE CIRCUITS TO GAIN A PROPER UNDERSTANDING OF THE SCOPE OF WORK. TIE PROPOSED CIRCUIT INTO EXISTING TIMECLOCK. E.C. SHALL PROVIDE A TIMECLOCK LOCATED IN WATER HEATER CLOSET. COORDINATE WITH G.C. FOR ORDER AND SEQUENCE OF OPERATIONS.

(PANEL / SWITCHBOARD / SERVICE) FEEDER SIZING

AMPERES	POLES	TYPE (XHHW) COPPER CONDUCTORS
30A	3	4#10 + 1#8 GND. IN 3/4" CONDUIT
60A	2	3#4 + 1#8 GND. IN 1" CONDUIT
60A	3	4#4 + 1#8 GND. IN 1-1/4" CONDUIT
100A	2	3#1 + 1#6 GND. IN 1-1/4" CONDUIT
100A	3	4#1 + 1#6 GND. IN 1-1/2" CONDUIT
125A, 150A	2	3#1/0 + 1#6 GND. IN 1-1/2" CONDUIT
125A, 150A	3	4#1/0 + 1#6 GND. IN 2" CONDUIT
200A	2	3#3/0 + 1#4 GND. IN 2" CONDUIT
200A	3	4#3/0 + 1#4 GND. IN 2" CONDUIT
225A	3	4#4/0 + 1#2 GND. IN 2-1/2" CONDUIT
300A	3	4#350kcmil + 1#2 GND. IN 3" CONDUIT
400A	3	4#600kcmil + 1#1/0 GND. IN 4" CONDUIT
600A	3	2 SETS OF: (4#350kcmil + 1#2 GND.) IN TWO (2) 3" CONDUITS
800A	3	2 SETS OF: (4#600kcmil + 1#1/0 GND.) IN TWO (2) 4" CONDUITS
1000A	3	3 SETS OF: (4#400kcmil + 1#1/0 GND.) IN THREE (3) 3" CONDUITS
1200A	3	3 SETS OF: (4#600kcmil + 1#1/0 GND.) IN THREE (3) 4" CONDUITS
1600A	3	4 SETS OF: (4#600kcmil + 1#1/0 GND.) IN FOUR (4) 4" CONDUITS
2000A	3	5 SETS OF: (4#600kcmil + 1#1/0 GND.) IN FIVE (5) 4" CONDUITS
2500A	3	6 SETS OF: (4#600kcmil + 1#1/0 GND.) IN SIX (6) 4" CONDUITS
3000A	3	7 SETS OF: (4#700kcmil + 1#1/0 GND.) IN SEVEN (7) 4" CONDUITS

(EQUIPMENT) SIZING CIRCUIT

AMP / POLE PANEL / SERVICE	POLES	TYPE (XHHW) COPPER CONDUCTORS
15A, 20A	1 (or) 2	2#12 + 1#12 GND. IN 3/4" CONDUIT
15A, 20A	3	3#12 + 1#12 GND. IN 3/4" CONDUIT
25A, 30A	1 (or) 2	2#10 + 1#10 GND. IN 3/4" CONDUIT
25A, 30A	3	3#10 + 1#10 GND. IN 3/4" CONDUIT
35A, 40A	1 (or) 2	2#8 + 1#10 GND. IN 3/4" CONDUIT
35A, 40A	3	3#8 + 1#10 GND. IN 3/4" CONDUIT
45A, 50A, 55A	1 (or) 2	2#6 + 1#10 GND. IN 3/4" CONDUIT
45A, 50A, 55A	3	3#6 + 1#10 GND. IN 3/4" CONDUIT
60A	2	2#4 + 1#10 GND. IN 1" CONDUIT
60A	3	3#4 + 1#10 GND. IN 1" CONDUIT
70A	3	3#4 + 1#8 GND. IN 1" CONDUIT
80A	3	3#3 + 1#8 GND. IN 1-1/4" CONDUIT
90A	3	3#2 + 1#8 GND. IN 1-1/4" CONDUIT
100A, 110A	3	3#1 + 1#6 GND. IN 1-1/4" CONDUIT
125A, 150A	3	3#1/0 + 1#6 GND. IN 1-1/2" CONDUIT
175A	3	3#2/0 + 1#6 GND. IN 2" CONDUIT
200A	3	3#3/0 + 1#4 GND. IN 2" CONDUIT

XXX / ##

MECHANICAL EQUIPMENT CONNECTION TAG:

REFER TO "MECHANICAL EQUIPMENT ELECTRICAL CONNECTION SCHEDULE" ON THIS DRAWING FOR ALL CIRCUITING INFORMATION, INCLUDING BUT NOT LIMITED TO BRANCH CIRCUITING WIRING AND CONDUIT SIZE, VOLTAGE, PHASE, MOTOR CONTROL, DISC. SWITCH & CIRCUIT BREAKER.

MECHANICAL EQUIPMENT ELECTRICAL CONNECTION SCHEDULE

XXX / # ITEM No.	DESCRPITION	LOCATION	EQUIPMENT CHARACTERISTICS					CIRCUIT	CIRCUIT BREAKER (HACR TYPE)	FEEDER & CONDUIT	DISCONNECT SWITCH				MANUAL MOTOR CONTROLLER	REMARKS
			VOLTS	PH	FREQ.	(KW)/HP	FLA				SIZE	FUSE	POLES	NEMA		
ERTU-1	EXISTING ROOF TOP UNIT	(SEE PLANS)	208	3	60	-	26.0	EXISTING	30A/3P	3#10 + 1#10 GND. IN 3/4" C.	30	30	3	3R	PROVIDE "WP" DISCONNECT SWITCH WITH FUSING AS INDICATED.	SEE BELOW
ERTU-2	EXISTING ROOF TOP UNIT	(SEE PLANS)	208	3	60	-	26.0	EXISTING	50A/3P	3#6 + 1#10 GND. IN 3/4" C.	60	50	3	3R	PROVIDE "WP" DISCONNECT SWITCH WITH FUSING AS INDICATED.	SEE BELOW
ERTU-3	EXISTING ROOF TOP UNIT	(SEE PLANS)	208	3	60	-	24.0	EXISTING	30A/3P	3#10 + 1#10 GND. IN 3/4" C.	30	30	3	3R	PROVIDE "WP" DISCONNECT SWITCH WITH FUSING AS INDICATED.	SEE BELOW
CEF-1	EXHAUST FAN	(SEE PLANS)	120	1	60	43W	-	PP1-A / 5	20A/1P	2#12 + 1#12 GND. IN 3/4" C.	-	-	-	-	PROVIDE MOTOR RATED TOGGLE SWITCH WITH THERMAL OVERRIDES.	SEE BELOW
CEF-1	EXHAUST FAN	(SEE PLANS)	120	1	60	43W	-	PP1-A / 7	20A/1P	2#12 + 1#12 GND. IN 3/4" C.	-	-	-	-	PROVIDE MOTOR RATED TOGGLE SWITCH WITH THERMAL OVERRIDES.	SEE BELOW
CEF-3	EXHAUST FAN	(SEE PLANS)	120	1	60	43W	-	PP1-A / 9	20A/1P	2#12 + 1#12 GND. IN 3/4" C.	-	-	-	-	PROVIDE MOTOR RATED TOGGLE SWITCH WITH THERMAL OVERRIDES.	SEE BELOW
CEF-4	EXHAUST FAN	(SEE PLANS)	120	1	60	66W	-	PP1-A / 11	20A/1P	2#12 + 1#12 GND. IN 3/4" C.	-	-	-	-	PROVIDE MOTOR RATED TOGGLE SWITCH WITH THERMAL OVERRIDES.	SEE BELOW
C-1	COMPRESSOR	(SEE PLANS)	208	1	60	2.25 HP	11.0	PP1-A / 1,3	20A/2P	2#12 + 1#12 GND. IN 3/4" C.	-	-	-	-	PROVIDE MOTOR RATED TOGGLE SWITCH WITH THERMAL OVERRIDES.	SEE BELOW

NOTES:
1. COORDINATE WITH HVAC CONTRACTOR & DRAWINGS FOR EXACT LOCATIONS OF ALL MECHANICAL EQUIPMENT PRIOR TO INSTALLING ELECTRICAL COMPONENTS.
2. COORDINATE WITH PLUMBING CONTRACTOR & DRAWINGS FOR EXACT LOCATIONS OF ALL PLUMBING EQUIPMENT PRIOR TO INSTALLING ELECTRICAL COMPONENTS.
3. ALL DISCONNECTING MEANS SHALL BE SUPPLIED AND INSTALLED BY THE ELECTRICAL CONTRACTOR.
4. ALL STARTERS, VFD'S ETC. SHALL BE SUPPLIED AND INSTALLED BY THE MECHANICAL CONTRACTOR. ELECTRICAL CONTRACTOR SHALL WIRE ALL HVAC EQUIPMENT.
5. ALL HVAC CONTROL WIRING SHALL BE PROVIDED BY OTHERS.

LIGHTING FIXTURE SCHEDULE

TYPE	MANUFACTURER	CATALOG No.	MOUNTING	LAMPING			VOLTAGE	DESCRIPTION / REMARKS
				TYPE	WATTAGE	QUANTITY		
A	PHILIPS LEDALIGHT	41-22-D1-ST-L-8B-E-S-7-D-E	RECESSED	LED	27.9	REFER TO RCP	120	2X2 LED TROFFER FIXTURE. E.C. TO COORDINATE FINAL FIXTURE SELECTION WITH OWNER/ARCHITECT.
C	PHILIPS LEDALIGHT	7806-L-2-C-Q-G-04-7-1-E-FINISH BY ARCH	PENDANT	LED	25	REFER TO RCP	120	4' LINEAR STRIP. E.C. TO COORDINATE FINAL FIXTURE SELECTION WITH OWNER/ARCHITECT.
D	PHILIPS LIGHTOLIER	CP6RB10930W	RECESSED	LED	16	REFER TO RCP	120	6" RECESSED DOWNLIGHT. E.C. TO COORDINATE FINAL FIXTURE SELECTION WITH OWNER/ARCHITECT.

NOTES:
1. PROVIDE ACCESSORIES AND MOUNTING HARDWARE AS REQUIRED FOR ALL FIXTURES.
2. ALL FIXTURE/ACCESSORY COLORS NOT INDICATED ON DRAWING'S SHALL BE SELECTED BY ARCHITECT.
3. PROVIDE LAMPING FOR ALL FIXTURES UNLESS LAMPING IS INCLUDED WITH FIXTURE AS INDICATED IN SCHEDULE.
4. PROVIDE TYPICAL UNIT MOCK UP FOR LIGHT FIXTURE HANGING HEIGHTS AND EXPOSED ELECTRICAL CONDUIT LAYOUT TO BE REVIEWED BY ARCHITECT.
5. FIXTURE TO BE WIRED TO PHOTO CELL AND TIME CLOCK PROVIDED BY G.C.
6. ALL LIGHT FIXTURES WITH INCANDESCENT LAMPING SHALL BE PROVIDED W/ CFL/LED LAMP IN LIEU OF INCANDESCENT LAMP.
7. CBA = COLOR TO BE SELECTED BY ARCHITECT (THE ELECTRICAL CONTRACTOR SHALL VERIFY COLOR & FINISH WITH ARCHITECT PRIOR TO SUBMITTAL OF SHOP DRAWINGS.

MANUFACTURER CONTACT:
BOSTON LIGHT SOURCE
TRACY SHANKLE
1-617-788-2400
EMAIL: tshankle@bostonlightsource.com

PANELBOARD SCHEDULE

PANEL: PP1-A — VOLTS: 120/ 208 — NEW/EXISTING.: NEW
MAIN: MLO — BUS AMPS: 100A — MOUNT.: SURFACE
PH/WIRE: 3/4 — AIC: MATCH EXISTING — LOC: SECOND FLOOR ELECTRIC CLOSET

CIR.	AMPS/ POLES	DESCRIPTION OF LOAD	LOAD kVA	NOTE		NOTE	LOAD kVA	DESCRIPTION OF LOAD	AMPS/ POLES	CIR.
1	20/1	CEF-1	.043	-		-	.18	NEW TR #11 GFI	20/1	2
3	20/1	CEF-2	.043	-		-	1.0	NEW TR #11 CHAIR	20/1	4
5	20/1	CEF-3	.043	-		-	.36	NEW TR #11 RECEPT.	20/1	6
7	20/1	CEF-4	.066	-		-	.18	NEW TR #11 GFI	20/1	8
9	20/ 2	C-1	2.28	-		-	1.0	NEW TR #11 CHAIR	20/1	10
11						-	.36	NEW TR #11 RECEPT.	20/1	12
13	20/1	NEW LIGHTING	.71	-		-	.18	NEW TR #11 GFI	20/1	14
15	20/1	CHECKOUT	.18	-		-	1.0	NEW TR #11 CHAIR	20/1	16
17	20/1	CHECKOUT	.18	-		-	.36	NEW TR #11 RECEPT.	20/1	18
19	20/1	GENERAL RECEPT.	.72	-		-	.18	NEW TR #11 GFI	20/1	20
21	20/1	TVS	.72	-		-	1.0	NEW TR #11 CHAIR	20/1	22
23	20/1	XRAY	1.2	-		-	.36	NEW TR #11 RECEPT.	20/1	24
25	20/2	STERILIZATION ROOM EQUIP.	3.32	-		-	.18	NEW TR #11 GFI	20/1	26
27						-	1.0	NEW TR #11 CHAIR	20/1	28
29	30/2	STERILIZATION ROOM EQUIP.	4.99	-		-	.36	NEW TR #11 RECEPT.	20/1	30
31						-	0	SPARE	20/2	32
33	20/1	STERILIZATION ROOM EQUIP.	1.9	-						34
35	20/1	STERILIZATION ROOM EQUIP.	1.9	-		-	0	SPARE	30/2	36
37	20/1	STERILIZATION ROOM EQUIP.	1.9	-						38
39	20/1	SPARE	0	-		-	0	SPARE	20/1	40
41	20/1	SPARE	0	-		-	0	SPARE	20/1	42
			14.50				7.70	TOTAL CONNECTED kVA:	22.20	
								TOTAL CONNECTED AMPERES:	61.68	

1.

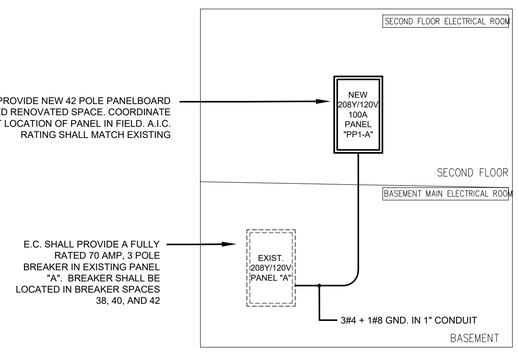

PARTIAL PROPOSED RISER RISER DIAGRAM

NOT TO SCALE

castellone architecture
792 great road
lincoln, ri 02865
401-465-9861

CDS ENGINEERING DESIGN SERVICES INCORPORATED
141 Lincoln Avenue, Warwick, Rhode Island 02886
Tel (401) 765-7659 Fax (401) 765-2994

DRAWN BY: ARM
JUNE 12, 2026
REVISIONS:

DENTAL CLINIC 2ND FLOOR ALTERATIONS

TRI-COUNTY COMMUNITY ACTION AGENCY
1126 HARTFORD AVENUE
JOHNSTON, RI 02919

ELECTRICAL SCHEDULES & DETAILS

E2-1

BID SET

suitable caps to protect installed duct against entrance of dirt and moisture.

G. Backfill trenches as required and under provisions of Division 2. Interface installation of underground warning tape with backfilling specified in Division 2. Install warning tape 12-inches below finished surface.

2.4 BUILDING WIRE & CABLE

A. Building Wire and Cable shall be copper with 600V insulation rated at 75°C minimum, Type XHHW insulation for feeders and branch circuits larger than #3 AWG; Type THHN/THWN insulation for feeders and branch circuits #4 AWG and smaller.

B. Conductors shall be of soft drawn 98% minimum conductivity properly refined copper, solid construction where No. 10 AWG and smaller, stranded construction where No. 8 AWG and larger.

C. Exterior of wires shall bear repetitive markings along their entire length indicating conductor size, insulation type and voltage rating.

D. Exterior of wires shall be color coded, so as to indicate a clear differentiation between each phase and between each phase and neutral. In all cases, grounded neutral wires and cables shall be identified by the colors "white" or "gray". In sizes and insulation types where factory applied colors are not available, wires and cables shall be color coded by the application of colored plastic tapes in overlapping turns at all terminal points, and in all boxes in which splices are made. Colored tape shall be applied for a distance of 6 inches along the wires and cables, or along their entire extensions beyond raceway ends, whichever is less.

E. Final connections to motors shall be made with 18" of neoprene sheathed flexible conduit.

F. Minimum branch circuit conductor size shall be No. 12 AWG installed in conduit. Motor control circuit wiring shall be minimum No. 14 AWG installed in conduit.

G. Fire alarm and security system wiring shall be No. 16 twisted non-shielded pairs for alarm and trouble circuits and a minimum of #14 AWG for device power, control and alarm annunciation circuits. Fire alarm system riser circuits shall be 2-hour rated, CI type (circuit integrity) cable per NFPA 72 and NEC 760.

H. Other wires and cables required for the various systems described elsewhere in this section of the Specifications shall be as specified herein, as shown on the Contract Drawings, or as recommended by the manufacturer of the specific equipment for which they are used, all installed in conduit.

I. Metal clad sheathed cable NFPA 70, type MC may be used for branch circuitry where shown and where run concealed and not subject to physical damage. All branch circuits shall be run in conduit from the panelboard to the first outlet. All type MC cable used shall contain a full-size insulated ground conductor. All conductors shall be copper. All type MC cable insulation used shall have voltage rating of 600 volts, shall have a temperature rating of 75° C, and shall be thermoplastic material. Armor material shall be steel and armor design shall be interlocked metal tape. Fire alarm rated MC cable may be used for fire alarm work where concealed and approved by the Authority Having Jurisdiction.

J. Metal-Clad cable (Type MC) for circuits supplying computer equipment, electronic discharge lighting and other sensitive electronic equipment shall consist of 90°C THHN copper conductors with insulated ground and oversized neutral conductor (or one full size neutral conductor for each phase conductor). Cable shall be U.L. listed/labeled and shall meet the requirements of NEC Art. 334 and 675.

K. Use armored cable (AFC Type HCF-90 or equal) for branch circuits and feeders in areas of patient care in hospitals, nursing homes and medical centers, medical office buildings and nurses' office areas of schools. This cable shall consist of 90°C THHN copper conductors with combined armor/bond wire (equipment) plus a green insulated ground (redundant). Use insulated bushings. Cable shall be U.L. listed/labeled, and shall meet the requirements of NEC Art. 333, 517 and 645.

L. Use armored cable (AFC Type HCF-90 or equal) for branch circuits and feeders in all buildings in the following areas; data processing systems, places of assembly, under raised floors, above suspended ceilings and in other environmental air-handling spaces. This cable shall consist of 90°C THHN copper conductors with combined armor/bond wire (equipment) plus a green insulated ground (redundant). Use insulated bushings. Cable shall be U.L. listed/labeled, and shall meet the requirements of NEC Art. 333, 517 and 645.

M. Mineral-insulated metal-sheathed fire-resistive cables, type MI, shall consist of a factory assembly of one or more solid copper conductors insulated with highly compressed magnesium oxide and enclosed in a seamless, liquid and gas-tight continuous copper sheath. Cables shall be rated for 600 volts. Cable shall comply with Article 330 of the National Electrical Code. Cables shall be classified by Underwriters Laboratories, Inc. as having a 2-hour fire resistive rating. Cable terminations shall be made with UL listed mineral-insulated cable fittings. Installation of MI cables shall be in accordance with the manufacturer's instructions. Cables shall be as manufactured by Pyrotenax USA, Inc., or approved equal.

N. Wiring materials except MI cable shall be manufactured by Triangle, Essex, General Cable, AFC, Southwire or equal.

O. Concealed Dry Interior Locations: Use only building wire Type THHN/THWN or XHHW insulation in raceway, or metal clad cable where concealed and code acceptable.

P. Exposed Dry Interior Locations: Use only building wire, Type THHN/THWN or XHHW insulation, in raceway.

Q. Above Accessible Ceilings: Use only building wire, Type THHN/THWN or XHHW insulation, in raceway or metal clad cable where code acceptable.

R. Wet or Damp Interior Locations: Use only building wire, Type THHN/THWN or XHHW insulation, in raceway.

S. Exterior Locations: Use only building wire, Type THHN/THWN or XHHW insulation, in raceway.

T. Underground Installations: Use only building wire, Type THHN/THWN or XHHW insulation, in raceway.

U. Wiring methods, in general, are as follows:

1. Galvanized rigid steel conduit shall be used for telephone system sleeves for main cable runs between floors, closets, etc. and for sweeps, bends, etc. in ductbanks and as specifically noted on the plans. EMT shall be used generally for exposed circuiting in unfinished spaces. Metal clad cable (type MC) may be used for branch circuiting and fire alarm rated MC cable for fire alarm circuiting where run concealed and where code acceptable.
2. To prevent transmittal of vibration to conduit, connections to any vibration producing equipment (i.e. transformers, motors, etc.) shall be terminated by 18 inches of flexible metal conduit. Where flexible connections are exposed to grease and oil, liquid-tight flexible metal conduit shall be used.
3. In general, no splices or joints shall be permitted in either feeders or branches except at outlets or accessible junction boxes. Splices in wire #8 AWG and smaller shall be pigtail type, made mechanically tight. All conduit systems shall be complete.
4. Raceway, boxes, etc., run on walls in wet areas which are subject to being washed down, shall be mounted on the walls with 1/4" stand-offs. All boxes shall be cast type.

V. Route wire and cable as required to meet the Project Conditions. Install cable in accordance with the NECA "Standard of Installation." Use solid conductor for feeders and branch circuits 10 AWG and smaller. Use stranded conductors for control circuits. Use conductor not smaller than 12 AWG for power and lighting circuits. Use conductor not smaller than 16 AWG for control circuits. Use 10 AWG conductors for 20 amperes, 120 volt branch circuits longer than 75 feet. Pull all conductors into raceway at same time. Use suitable wire pulling lubricant for building wire 4 AWG and larger. Protect exposed cable from damage.

W. Support cables above accessible ceiling, using spring metal clips or metal cable ties to support cables from structure or ceiling suspension system, cables that are not part of the ceiling system cannot be supported from ceiling supports. Do not rest cable on ceiling panels. Use suitable cable fittings and connectors. Neatly train and lace wiring inside boxes, equipment, and panelboards.

X. Clean conductor surfaces before installing lugs and connectors. Make splices, taps, and terminations to carry full ampacities of conductors with no perceptible temperature rise. Use suitable reducing connectors or mechanical connector adapters for connecting aluminum conductors to copper conductors. Use split bolt connectors for copper conductor splices and taps, 6 AWG and larger. Tape un-insulated conductors and connector with electrical tape to 150 percent of insulation rating of conductor. Use solderless pressure connectors with insulating covers for copper conductor splices and taps, 8 AWG and smaller. Use insulated spring wire connectors with plastic caps for copper conductor splices and taps, 10 AWG and smaller. Identify and color code wire and cable. Identify each conductor with its circuit number or other designation indicated.

2.5 BOXES

A. Outlet Boxes:

1. Each outlet in wiring or raceway systems shall be provided with an outlet box to suit conditions encountered. Boxes installed in normally wet locations shall be of cast-metal type having hubs. Concealed boxes shall be cadmium plated or zinc coated sheet metal type. Old work boxes with Madison clamps are not allowed in new construction.
2. Each box shall have sufficient volume to accommodate number of conductors in accordance with requirements of NFPA 70. Boxes shall not be less than 1-1/2" deep unless shallower boxes are required by structural conditions and are specifically approved by Architect. Ceiling and bracket outlet boxes shall not be less than 4" octagonal except that smaller boxes may be used where required by particular fixture to be installed. Flush or recessed fixtures shall be provided with separate junction boxes when required by fixture terminal temperature requirements. Switch and receptacle boxes shall be 4" square or of comparable volume. Luminaire and equipment supporting boxes shall be rated for weight of equipment supported; include 1/2 inch (13 mm) male fixture studs where required.
3. Provide metallic boxes rated for 2-hour, fire-rated walls with gasket to reduce noise-transmission in all fire-rated walls. A minimum horizontal distance of 24-inches shall separate metallic boxes located on opposite sides of walls. This minimum horizontal spacing may be reduced using UL classified wall opening protective materials, commonly known as "putty pads" or "insert pads" pending written approval from the local authority having jurisdiction (AHJ). Refer to Architect's plans for all wall types prior to bid and any related work that will require 2-hour fire ratings.
4. Acceptable Manufacturers:
   a. Appleton
   b. Crouse Hinds
   c. Steel City
   d. RACO

B. Pull and Junction Boxes: Where necessary to terminate, tap off, or redirect multiple raceway runs or to facilitate conductor installation, furnish and install appropriately designed boxes. Boxes shall be fabricated from code gauge steel assembled with corrosion resistant machine screws. Box size shall be as required by Code. Where intermediate cable supports are necessary because of box dimensions, provide insulated removable core brackets to support conductors. Junction boxes are to be equipped with barriers to separate circuits. Where splices are to be made, boxes shall be large enough to provide ample work space. All conductors in boxes are to be clearly tagged to indicate characteristics. Boxes shall be supported independently of raceways. Junction boxes in moist or wet areas shall be galvanized type. Boxes larger than 4-inches square shall have hinged covers. Boxes larger than 12-inches in one dimension will be allowed to have screw fastened covers, if a hinged cover would not be capable of being opened a full 90 degrees due to installation location.

C. Fiberglass Handholes shall be die molded glass fiber. Cable Entrance shall be pre-cut 6-inch x 6-inch (150 mm x 150 mm) cable entrance at center bottom of each side. Cover shall be glass fiber weatherproof cover with nonskid finish.

D. Install boxes in accordance with NECA "Standard of Installation." Install in locations as shown on Drawings, and as required for splices, taps, wire pulling, equipment connections and compliance with regulatory requirements.

E. Set wall mounted boxes at elevations to accommodate mounting heights indicated or specified in section for outlet device. Electrical boxes are shown on drawings in approximate locations unless dimensioned. Adjust box location up to 10-feet (3m) if required to accommodate intended purpose. Orient boxes to accommodate wiring devices. Maintain headroom and present neat mechanical appearance.

F. Install pull boxes and junction boxes above accessible ceilings and in unfinished areas only. Inaccessible Ceiling Areas: Install outlet and junction boxes no more than 6 inches (150 mm) from ceiling access panel or from removable recessed luminaire. Install boxes to preserve fire resistance rating of partitions and other elements, using materials and methods specified in Division 7.

G. Coordinate mounting heights and locations of outlets mounted above counters, benches, and backsplashes. Locate outlet boxes to allow luminaires positioned as shown on reflected ceiling plan. Align adjacent wall mounted outlet boxes for switches, thermostats, and similar devices.

H. Use flush mounting outlet box in finished areas. Locate flush mounting box in masonry wall to require cutting of masonry unit corner only. Coordinate masonry cutting to achieve neat opening. Do not install flush mounting box back-to-back in walls; provide minimum 6-inches separation. Provide minimum 24 inches (600 mm) separation in acoustic rated walls. Secure flush mounting box to interior wall and partition studs. Accurately position to allow for surface finish thickness. Use stamped steel bridges to fasten flush mounting outlet box between studs. Install flush mounting box without damaging wall insulation or reducing its effectiveness.

I. Use adjustable steel channel fasteners for hung ceiling outlet box. Do not fasten boxes to ceiling support wires. Support boxes independently of conduit. Use gang box where more than one device is mounted together. Do not use sectional box. Use gang box with plaster ring for single device outlets. Use cast outlet box in exterior locations exposed to the weather and wet locations. Use cast floor boxes for installations in slab on grade; formed steel boxes are acceptable for other installations. Set floor boxes level.

J. Large Pull Boxes: Use hinged enclosure in interior dry locations, surface-mounted cast metal box in other locations.

K. Adjust floor box flush with finish flooring material. Adjust flush-mounting outlets to make front flush with finished wall material. Install knockout closures in unused box openings.

2.6 WIRING DEVICES

A. Provide wiring device type plates for all wall-mounted devices. All wall plates shall be either brushed aluminum or smooth high impact nylon for all public areas as directed by the Architect. Provide galvanized steel for all Utility, Electric and Mechanical Rooms. Colors of wall plates as directed by the Architect.

B. Wiring devices standard for the project (i.e., with no specific type indicated) shall conform to the following:

1. Visible part colors of wiring devices shall be as directed by the Architect for all public areas. Provide Ivory colored devices for all Utility, Electrical and Mechanical rooms.
2. Exclude compact type devices.

C. Wiring device switches shall be toggle type, A.C. quiet design, specification grade, 20 amps on 120-volt circuits. Switches shall be mounted 48-inches to center line above finished floor unless noted otherwise. Equivalent 277volt, 20 amp switches shall be used where required.

D. Standard duplex convenience receptacles shall be 125volt, 20 amps, three wire (two circuit wires plus ground), "U-slot" ground NEMA configuration 5-20R, specification grade. Receptacles shall be mounted 18" to center line above finished floor unless noted otherwise. Where indicated on plans provide receptacles with ground fault current interrupters, UL Class A; 20A, 125V.

E. All nonlocking type 15A and 20A, 125v receptacles in the following areas of the dwelling units [NEC 210.52] shall be listed as tamper-resistant [NEC 406.12].

1. wall space -- NEC 210.52(A)
2. small-appliance circuit -- NEC 210.52(B)
3. countertop space -- NEC 210.52(C)
4. bathroom area -- NEC 210.52(D)
5. outdoors -- NEC 210.52(E)
6. laundry area -- NEC 210.52(F)
7. garage and outbuildings -- NEC 210.52(G)
8. hallways -- NEC 210.52(H)

F. Non-standard convenience receptacles and special purpose power supply receptacles shall be as listed on plans.

G. Provide ground fault circuit interrupter (GFCI), weather-resistant type receptacles in all wet and damp locations as defined by the National Electrical Code. All outdoor receptacles and where indicated on the plans shall be installed in a weatherproof while-in-use enclosures.

H. Weatherproof Receptacle Enclosures shall be NEMA 3R rated for rain-tight while-in-use, gasketed, impact resistant thermoplastic with hinged gasketed device cover.

I. Provide extension rings to bring outlet boxes flush with finished surface. Clean debris from outlet boxes. Install devices plumb and level. Install receptacles with grounding pole on top. Connect wiring device grounding terminal to branch circuit equipment grounding conductor. Use jumbo size plates for outlets installed in masonry walls. Install galvanized steel plates on outlet boxes and junction boxes in unfinished areas, above accessible ceilings, and on surface mounted outlets.

J. Install wall switch 48 inches above finished floor to top of handle. On position, shall be up. Install convenience receptacles 18-inches above finished floor. Install convenience receptacle 6-inches above backsplash of counter. Install dimmer switches 48 inches above finished floor to top.

K. Verify that each receptacle device is energized. Test each receptacle device for proper polarity. Test each GFCI receptacle device for proper operation.

2.7 CABINETS & ENCLOSURES

A. Cabinets shall be as follows: Boxes: Galvanized steel. Box Size: As required and/or indicated on plans. Backboard: Provide 3/4-inch-thick plywood backboard for mounting terminal blocks. Paint matte white. Fronts: Steel, flush type with concealed trim clamps, door with concealed hinge, and flush lock keyed to master system. Finish with gray baked enamel. Finish with primer. Knockouts: As required and/or indicated on plans. Provide metal barriers to form separate compartments wiring of different systems and voltages. Provide accessory feet for free-standing equipment.

B. Hinged Cover Enclosures shall be as follows: Construction: NEMA 250, Type 1, 3R, or 4 steel enclosure, as required and/or indicated on plans. Covers: Continuous hinge, held closed by flush latch operable by key or hasp and staple for padlock. Provide interior plywood panel for mounting terminal blocks and electrical components, finish with white enamel. Enclosure Finish: Manufacturer's standard enamel.

C. Install in accordance with NECA "Standard of Installation." Install enclosures and boxes plumb. Anchor securely to wall and structural supports at each corner under the provisions of Section 16190. Install cabinet fronts plumb.

D. Clean electrical parts to remove conductive and harmful materials. Remove dirt and debris from enclosure. Clean finishes and touch up damage.

E. ICS 4 - Terminal blocks for industrial control equipment and systems. Power Terminals: Unit construction type with closed back and tubular pressure screw connectors, rated 600 volts. Signal and Control Terminals: Modular construction type, suitable for channel mounting, with tubular pressure screw connectors, rated 300 volts. Provide ground bus terminal block, with each connector bonded to enclosure.

F. Provide grounding provisions for all cabinets/enclosures and bond to grounding system as required per Code.

2.8 GROUNDING & BONDING

A. Ground all systems and equipment in accordance with best industry practice, the requirements of NFPA 70 and the following:

1. The ground bus of the main switchboard shall be connected to the main grounding electrode specified below by means of insulated conductors run in conduit.
2. The main grounding electrode shall be an accessible point on the nearest metallic main water service pipe. Connection shall be made on the street side of the main valve utilizing a ground clamp of a type specifically manufactured for the purpose. Bonding jumpers shall be provided around the water meters and around insulating joints and/or sections.
3. Establish a ground bonding connection from the effectively grounded structural building steel to each cold-water main entering the building. Each bonding connection shall consist of insulated conductors run in conduit.
4. The water pipe ground shall be supplemented by an additional electrode consisting of three (3) buried 3/4" diameter by 10'-0" long copperweld ground rods spaced 10'-0" apart and provided in sufficient quantity so as to have measured resistance to ground of not more than 10 ohms. Provide independent certification confirming this. Establish a bonding connection from the electrode consisting of green insulated conductors run in conduit and sized as indicated hereinafter for main and supply side of service bonding jumpers.
5. Provide grounding bonds between all metallic conduits of the light and power system which enter and leave cable chambers or other non-metallic cable pulling and splicing boxes. Accomplish this by equipping the conduits with bushings of the grounding type individually cross connected.
6. Bond metallic conduits containing grounding electrode conductors and main bonding conductors to the ground bus service enclosure and/or grounding electrode at both ends of each run utilizing grounding bushings and jumpers.
7. Provide grounding bonds for all metallic conduits of the light and power system which terminate in pits below equipment for which a ground bus is specified. Accomplish this by equipping the conduits with bushings of the grounding type connected individually to the ground bus.
8. Provide supplementary ground bonding where metallic conduits terminate at metal clad equipment (or at the metal pull box of equipment) for which a ground bus is specified. Accomplish this be equipping the conduits with bushings of the grounding type connected individually by means of jumpers to the ground bus. Exclude the jumpers where directed. This exclusion will be required where an isolated ground for electronic equipment is to be maintained.
9. Each grounding type bushing shall have the maximum ground wire accommodation available in standard manufacture for the particular conduit size. Connection to bushing shall be with wire of this maximum size.
10. Bonding conductors on the load size of the service device and equipment grounding conductors shall be sized in relation to the fuses or trip size of the overcurrent device supplying the circuit.
11. The central equipment for the fire protective alarm system and telephone system shall have its grounding terminal connected to the grounding electrode by means of a No. 6 green coded insulated conductor, run in 3/4" conduit. Utilize a ground clamp of a type specifically manufactured for the purpose.
12. Install rod electrodes per this section & in compliance with Code. Install additional rod electrodes as required to achieve specified resistance to ground. Install 4/0 AWG bare copper wire in foundation footing as required. Provide isolated grounding conductor for circuits supplying personal computers as indicated on the plans. Equipment Grounding Conductor: Provide separate, insulated conductor within each feeder and branch circuit raceway. Terminate each end on suitable lug, bus, or bushing. Provide a 3/4" raceway with #6 AWG ground wire from main telephone terminal board to the service ground.
13. Grounding means shall never exceed 10 ohms when located outdoors, or 5 ohms when located indoors.
14. An acceptable means of grounding is to provide an underground 2" thick, concrete-encased electrode of either ½" diameter, electrically conductive reinforcing bar of #4/0 bare copper conductor (minimum of 20-feet in length) per NEC 250.52(A)(3).

2.9 EQUIPMENT WIRING SYSTEM

A. Cords & Caps: Manufacturers: Hubbell, Pass & Seymour or Arrow Hart. Attachment Plug Construction: Conform to NEMA WD 1. Configuration: NEMA WD 6; match receptacle configuration at outlet provided for equipment. Cord Construction: ANSI/NFPA 70, Type SO multiconductor flexible cord with identified equipment grounding conductor, suitable for use in damp locations. Size: Suitable for connected load of equipment, length of cord, and rating of branch circuit overcurrent protection.

B. Motor Control Equipment: Each motor shall have a starter furnished under this Section where it is not being supplied by other sections. Wire and installed under this Section, unless otherwise noted herein or on the drawings.

1. Connect the motor starting devices for all motors, except where otherwise specifically provided for under other sections, furnish all necessary connections between controllers and motors, in conduit and leave motors ready to start. Change connections, if necessary, to secure proper rotation of motors.
2. Perform all the necessary wiring in connection with the motor starting and remote control equipment, where so designated, furnished under other sections. Where control or starting equipment is sent to the job as individual units, they shall be installed, wired up complete and left ready for operation under work of this section.
3. Wiring to motor shall be in rigid conduit with wattertight flexible conduit from wall to motor only.

C. Included in the general requirements for motor control equipment wiring and connections, the following specified items shall be performed:

1. Installation and connection of motor controls which will be furnished under the heating, ventilating and air conditioning section and the plumbing section.

D. Starters by This Contractor: Where starters are not provided under other sections, this Contractor shall furnish starters for motors 1/2 HP and larger and where required by the control sequence for smaller motors and shall be magnetic across the line starters with adjustable overload protection in each phase line, all in NEMA 1 enclosures. Starters shall be solid state or acceptable substitute. Combination starters shall be with fused or non-fusible disconnect as required.

1. Magnetic starters shall have 120 volt holding circuits, integral transformers, auxiliary contacts as required by the control sequence and integral selector switches with push-to-test pilot lights. One side of each pilot light shall be connected on the load side of the motor starter.
2. Integral transformers shall have overload protection on the secondary section and, also, the secondary neutral shall be grounded.
3. Starters shall be as manufactured by Square D Company, Siemens or General Electric.

E. Temperature control wiring shall be by others as indicated under the heating, ventilating and air conditioning section.

F. Provide a suitable plywood backboard on a wall and/or angle iron or unistrut framework with plywood for all starters. Starters will be installed and wired under this section.

G. All starters shall be located next to the panel feeding same, if panel is in a closet or utility space, unless noted otherwise on the drawings. If panel is located in a finished space (i.e. corridor, gymnasium, etc.) starters shall be located in a nearby utility closet or space acceptable to the Engineer.

H. Nameplates: Each starter shall have a 1.0" x 2.5" hot stamped nameplate identifying the unit and panel it is fed from. The lettering shall be white 1/2" high in a black background.

I. Connections to systems: Make electrical connections in accordance with equipment manufacturer's instructions. Make conduit connections to equipment using flexible conduit. Use liquid-tight flexible conduit with watertight connectors in damp or wet locations. Make wiring connections using wire and cable with insulation suitable for temperatures encountered in heat producing equipment. Provide receptacle outlet where connection with attachment plug is indicated. Provide cord and cap where field-supplied attachment plug is indicated. Provide suitable strain-relief clamps and fittings for cord connections at outlet boxes and equipment connection boxes. Install disconnect switches, controllers, control stations, and control devices as indicated. Modify equipment control wiring with terminal block jumpers as indicated. Provide interconnecting conduit and wiring between devices and equipment where indicated.

J. Elevators:

1. The electrical contractor (E.C.) shall verify the horsepower, voltage, starting method (i.e.; across-the-line, solid-state, etc.), and recommended over-current protection with the elevator supplier, prior to installing any material. Coordinate with Engineer for any discrepancies between plans and actual elevator to be installed prior to ordering related electrical material.
2. Provide a minimum of one (1) fire alarm system smoke detector in each elevator lobby, at each landing and in each machine room. Provide necessary connections between the smoke detectors and elevator controller for recall requirements. Coordinate with local authority having jurisdiction for primary and alternate recall landings.
3. Provide a pit light and switch with convenience receptacle in each elevator pit; switch shall be accessible from pit access floor, located 18" above floor. The pit convenience receptacle shall have GROUND FAULT PROTECTION (GFCI). Provide GFCI type duplex convenience receptacles in each elevator machine room. Lighting in hoistways shall not be connected to the load side of the GFCI receptacle. Locate light fixture to avoid being struck by the elevator car or counter-weight; coordinate with elevator supplier. The switch shall be located so as to be readily accessible from the pit door.
4. Provide a fused mainline heavy-duty disconnect switch in machine room with feeder wires to elevator controller, all piped in accordance with NEC, and grounded. Provide a #6 AWG, minimum, green colored ground for the disconnect switch and controller. Disconnect switch shall be located on the jamb side of the machine room door and shall be the type that cannot be engaged with the door open.
5. Machine rooms shall have a minimum of seven (7) feet clear headroom under all obstructions, including light fixtures.
6. Provide power and disconnects for all car lights, fans, car signals, viscosity control heaters, elevator controls and other provided equipment. Coordinate with elevator supplier for exact requirements.
7. Only electrical equipment, wiring, devices, etc..., required for the operation of the elevator shall be permitted in the elevator machine room, pit and hoistway. All electrical equipment, devices, wiring, raceways, junction boxes, etc., foreign to the elevator shall not be installed in the elevator machine room or hoistway.
8. Provide a dedicated GFCI receptacle and branch circuit (20A/125V) in a weather-proof while-in-use enclosure in each elevator pit for sump pump.
9. Provide an ADA compliant telephone or intercom for each elevator.
10. In hoistways, all electrical equipment located less than 48-inches above the pit floor shall be weatherproof (NEMA 4); and wiring shall be identified for use in wet locations in accordance with the requirements in NFPA 70.
11. Where sprinklers are installed in elevator machine rooms or hoistways, E.C. shall provide with heat detectors (used to automatically disconnect the main line power supply to the elevator prior to the application of water from sprinklers) a set of normally closed contacts with wiring from the heat detector to a shunt trip circuit breaker in the panel supplying power to the elevator. The normally closed contacts shall be closed when the heat detector is not activated and shall be opened when the heat detector is activated.
12. Where an emergency return unit is provided with the elevator, the electrical contractor shall provide a set of auxiliary contacts with the elevator disconnect switch and wiring to the elevator controller, per ANSI/NFPA 70-1996, section 620-91(c). The auxiliary contacts shall be positively open when the disconnect switch is open. The auxiliary contacts shall cause the emergency return unit power source to be disconnected from its load when the disconnecting means is in the open position. Verify requirements with elevator supplier.
13. Provide fire alarm system connections for elevator cab "fire-fighters hat" indicator as required. Coordinate connection requirements with elevator and fire alarm system manufacturers as required.
14. Provide control modules that shall capture the elevator when the fire alarm system is activated and therefore bring the elevator cab to a pre-determined floor & alternate floor as required. Coordinate with elevator manufacturer & installer for connections and programming. Coordinate with fire department & architect for pre-determined floor and alternate floor.
15. Where hoistways have access doors, the electrical contractor shall provide control wiring in conduit between the access doors locking mechanisms and the elevator controller per the elevator manufacturer's instructions to lock-out the access doors from being opened while the elevator cab is traveling between floors.

2.10 SUPPORTING DEVICES

A. Materials and Finishes: Provide adequate corrosion resistance. Provide materials, sizes, and types of anchors, fasteners and supports to carry the loads of equipment and conduit. Consider weight of wire in conduit when selecting products. Steel channel shall be galvanized.

B. Anchors and Fasteners:

1. Concrete Structural Elements: Use precast insert system, expansion anchors.
2. Steel Structural Elements: Use beam clamps, or welded fasteners.
3. Concrete Surfaces: Use self-drilling anchors or expansion anchors.
4. Hollow Masonry, Plaster, and Gypsum Board Partitions: Use toggle bolts or hollow wall fasteners.
5. Solid Masonry Walls: Use expansion anchors or preset inserts.
6. Sheet Metal: Use sheet metal screws.
7. Wood Elements: Use wood screws.

C. Installation: Install products in accordance with manufacturer's instructions. Provide anchors, fasteners, and supports in accordance with NECA "Standard of Installation". Do not fasten supports to pipes, ducts, mechanical equipment, and conduit. Do not use spring steel clips and clamps. Do not use powder-actuated anchors. Do no drill or cut structural members. Fabricate supports from structural steel or steel channel. Rigidly weld members or use hexagon head bolts to present neat appearance with adequate strength and rigidity. Use spring lock washers under all nuts. Install surface-mounted cabinets and panelboards with a minimum of four anchors. In wet and damp locations use steel channel supports to stand cabinets and panelboards one inch off wall. Use sheet metal channels to bridge studs above and below cabinets and panelboards recessed in hollow partitions.

2.11 ELECTRICAL IDENTIFICATION

A. Nameplates: Engraved three-layer laminated plastic, black letters on white background. Locations: Each electrical distribution and control equipment enclosure, communication cabinets. Letter Size: Use 1/8-inch letters for identifying individual equipment and loads. Use 1/4 inch letters for identifying grouped equipment and loads.

B. Labels: Embossed adhesive tape, with 3/16-inch white letters on black background. Use for identification of individual power receptacle faceplates indicating panel & circuit number the outlet is fed from and control device identification. In addition to nameplates as described above, use labels on all panelboards, disconnect switches and enclosed circuit breakers to identify where the equipment is fed from, voltage & phase.

C. Wire markers: Tape, or tubing type wire markers. Locations: Each conductor at panelboard gutters, pull boxes, outlet and junction boxes, and each load connection. Power and Lighting Circuits shall be marked with panel and branch circuit, or feeder number as indicated on drawings. Control Circuits shall be marked with control wire number indicated on schematic and interconnection diagrams on drawings

D. Conduit markers: Corrosion and abrasion resistant. Location: Furnish markers for each conduit larger than 6 feet (2 m). Spacing: 20 feet on-center. Indicate voltage and phase.

E. All panelboards shall be provided with a typed (handwritten is not allowed) circuit directory indicating the load fed by each circuit breaker and its location in the building.

2.12 ENCLOSED SWITCHES

A. Fusible Switch Assemblies shall be provided in accordance with the following. Description: NEMA KS 1, Type GD with externally operable handle interlocked to prevent opening front cover with switch in ON position, enclosed load interrupter knife switch. Handle lockable in OFF position. Fuse clips: Designed to accommodate NEMA FU1, Class R fuses. Provide NEMA 3R where located outdoors, kitchens or other interior wet areas.

B. Non-fusible switch assemblies shall be provided in accordance with the following. Description: NEMA KS 1, Type GD with externally operable handle interlocked to prevent opening front cover with switch in ON position enclosed load interrupter knife switch. Handle lockable in OFF position. Provide NEMA 3R where located outdoors, kitchens or other interior wet areas.

C. Install in accordance with NECA "Standard of Installation". Install fuses in fusible disconnect switches. Apply adhesive tag on inside door of each fused switch indicating NEMA fuse class and size installed.

2.13 PANELBOARDS

A. Description: NEMA PB1, circuit breaker type, lighting, and appliance branch circuit panelboard.

B. Panelboard Busing: Bus bars shall be copper. Provide copper ground bus bar in all panelboards.

C. Minimum Integrated Short Circuit Rating: 100,000 amperes RMS symmetrical for 240 volt panelboards; or as indicated. 100,000 amperes RMS symmetrical for 480 volt panelboards; or as indicated If electrical serving utility company determines the maximum integrated short circuit rating is less than as specified, then the panelboards may be reduced pending approval by the Architect/Engineer.

D. Molded Case Circuit Breakers: NEMA AB 1, bolt-on type thermal magnetic trip circuit breakers, with common trip handle for all poles, listed as Type SWD for lighting circuits, Type HACR for air conditioning equipment circuits, Class A ground fault interrupter circuit breakers where scheduled. Do not use tandem circuit breakers.

E. Enclosure: NEMA PB 1, Type 1.

F. Cabinet Box: 6 inches deep, 20 inches wide for 240 volt and less panelboards.

G. Cabinet Front: Flush or Surface cabinet front as scheduled with concealed trim clamps, concealed hinge, metal directory frame, and flush lock all keyed alike. Finish in manufacturer's standard ANSI 49 enamel.

2.14 ENCLOSED CIRCUIT BREAKERS

A. Enclosed Molded Case Circuit Breaker: Comply with NEMA AB 1. Include provisions for padlocking. Provide insulated grounding lug in each enclosure. Provide Products suitable for use as service entrance equipment where so applied. Fabricate enclosure from steel.

B. Install enclosed circuit breakers where indicated, in accordance with manufacturer's instructions. Install enclosed circuit breakers plumb. Provide supports in accordance with these specifications. Height: 5 ft (1.6 M) to operating handle. Provide engraved plastic nameplates.

C. Inspect each circuit breaker visually. Perform several mechanical ON-OFF operations on each circuit breaker. Verify circuit continuity on each pole in closed position. Determine that circuit breaker will trip on overcurrent condition, with tripping time to NEMA AB 1 requirements. Include description of testing and results in test report.

2.15 FUSES

A. All fuses shall be rated for proper voltage in which they are applied. Interrupting ratings shall be greater than the short circuit current available at the terminals of the switch.

B. Fuse types:

1. Fuses for branch circuits shall be time delay class J.
2. Fuses for equipment other than motor loads shall be general fast acting RK-5 or Class J.
3. Control power transformers for motor controller circuits shall be as recommended by motor starter and motor control center manufacturer.
4. Fuses for motors shall be sized at 250% of the motor FLA.
5. Fuses for non-motor loads shall be sized at 125% of the rated FLA of equipment served.
6. Fuses for elevator lifts shall be dual element type and sized in accordance with the elevator manufacturer's recommendations.

C. Spare Fuses

1. Provide spare fuses in the amount of 20% (not less than three (3) nor more than nine (9) of all sizes and types).
2. Spare fuses shall include general purpose fuses, motor fuses, and control fuses used in motor control centers, starters etc.
3. A complete list and quantity of spare fuses shall be submitted with record drawings for review.

2.16 ENCLOSED CONTACTORS

A. General purpose contactors: NEMA ICS 2, AC general purpose magnetic contactor. Coil Voltage as indicated. Poles as indicated. Size as indicated. Enclosure per ANSI/NEMA ICS 6, Type as scheduled.

B. Lighting contactors: NEMA ICS 2, magnetic lighting contactor. Coil Voltage as indicated. Poles as indicated. Size as indicated. Contact Rating shall match branch circuit overcurrent protection, considering de-rating for continuous loads.

C. Accessories: Provide Pushbuttons and Selector Switches per NEMA ICS 2, heavy duty type. Provide indicating lights per NEMA ICS 2, push-to-test type. Provide auxiliary contacts per NEMA ICS 2, Class A300 or A600 as required per equipment served.

2.17 INTERIOR LUMINAIRES

A. Lighting fixtures shall be in accordance with identifications as follows:

B. All lamping shall be of the highest quality available.

C. Finishes shall be as selected by the Architect or as indicated on the plans.

D. Any additional appurtenances required for installation and operation, where same are not covered by the identification used on the drawings, shall be included. Lighting fixtures and equipment shall be furnished complete, wired and assembled, including canopies, lamps and other incidental items. Install specified lamps in each luminaire.

E. Recessed fixtures shall be coordinated with ceiling construction by the Electrical Contractor prior to Bid. Refer to the Architect's plans, details and elevations for ceiling types by area. Provide plaster trim kits as required by ceiling construction.

F. Exact location of all fixtures shall be confirmed with Architect prior to rough-in. Install surface mounted luminaires and exit signs plumb and adjust to align with building lines and with each other. Secure to prevent movement.

G. Recessed fixtures throughout shall have their components, wiring and external connections coordinated for use in ceilings utilized as air handling plenums. Install recessed luminaires to permit removal from below. Install recessed luminaires using accessories and firestopping materials to meet regulatory requirements for fire rating. Install clips to secure recessed grid-supported luminaires in place

H. Fixtures for use outdoors or in areas designated as damp locations, shall be suitably gasketed and UL listed for such applications.

I. Make wiring connections to branch circuit using building wire with insulation suitable for temperature conditions within luminaire

J. Emergency batteries for exterior fixtures shall be remote mounted within the building. Verify maximum distances for remote mounting the emergency batteries with the manufacturer prior to installation. Locate remote emergency batteries above accessible ceilings or utility rooms as required. Provide test switches for all emergency batteries as required.

K. Unless noted otherwise, all fixtures shall be 3500K and have a minimum CRI of 85.

L. The Contractor shall obtain all information relative to the exact type of hung ceilings and suspension systems to be installed before ordering any recessed fixtures. This Contractor shall furnish the proper type fixtures applicable to the ceiling framing system. If, other than the type of fixtures specified are required for installation due to the type of ceiling construction, this Contractor shall furnish and install the proper type fixtures and mounting appurtenances required at no extra charge.

M. The Contractor shall coordinate the exact locations of all lighting fixtures with the ceiling pattern during the construction period and before installation of the fixtures. Interferences between lighting fixtures, and other equipment, shall be brought to the attention of the General Contractor.

N. Include the aiming and/or adjustments of all lighting fixtures requiring same in accordance with instructions issued by the Architect in the field. Aim and adjust luminaries as indicated or as directed by the Owner, Architect or Engineer. Position exit sign directional arrows as indicated. Operate each luminaire after installation and connection. Ensure proper connection and operation.

O. Lighting fixtures shall be supported from building structure only, not from hung or suspended ceiling, by means of chains or threaded rods. The use of tie wire will not be allowed. All fixtures shall include seismic clips and shall be supported to comply with seismic regulations. Install suspended luminaires using pendants supported from swivel hangers or other suitable leveling means. All rows of fixtures shall be level, aligned with building lines and run parallel to each other. Provide pendant length required to suspend luminaires at indicated height. Support lumina

SECTION 260000 - ELECTRICAL

PART 1 - GENERAL

1.1 RELATED SECTIONS

A. Drawings and General Provisions of Contract, including General and Supplementary Conditions and Division 1 Specification Sections, apply to work of this section.

B. This Contractor shall also include allowances for startup and for making the systems fully operational, and for scope and design contingencies. Future changes in price for items not shown on these drawings will not be allowed if the system itself is shown on these Drawings.

C. Give notices, file plans, obtain permits and licenses, pay fees and back charges, and obtain necessary approvals from authorities that have jurisdiction as required to perform work in accordance with all legal requirements and with Specifications, Drawings, Addenda and Change Orders, all of which are part of Contract Documents.

D. The drawings show the layout of the electrical systems and indicate the approximate locations of outlets, apparatus, and equipment. The runs of feeders and branches as shown on the drawings are schematic only. The exact routing of branch circuits and feeders shall be determined by the structural conditions and possible obstructions. This shall not be construed to mean that the design of the systems may be changed but refers only to exact runs between given points. The Engineer reserves the right to revise the drawings from time to time to indicate changes in the work.

E. The Contractor shall consult and review all contract and reference drawings which may affect the location of any outlets, apparatus and equipment to avoid any possible interference and permit full location of outlets, apparatus and equipment up to the time of rough-in is reserved by the Engineer and such change shall be made without additional expense to the Owner.

F. It shall be the responsibility of this Contractor to see that all electrical equipment such as junction and pull boxes, panelboards switches, controls and such other apparatus as may require maintenance and operation from time to time is made accessible. Although the equipment may be shown on the drawings in certain locations, the construction may disclose the fact that such locations do make its position accessible. In such cases this Contractor shall call the attention of the Engineer to the condition before advancing the construction to a state where a change will reflect additional expense to the Owner.

1.2 SUMMARY

A. This Section specifies the basic requirements for electrical installations and includes requirements common to more than one section of Division 26. It expands and supplements the requirements specified in sections of Division 1.

B. These documents have been prepared with the intention that they call for finished, tested work, in full operating condition and complete with necessary accessories.

C. The contract drawings are generally diagrammatic and convey the scope of work and general arrangement of apparatus and equipment. The locations of all items shown on the drawings or called for in the specifications that are not definitely fixed by dimensions are approximate only. The exact locations necessary to secure the best conditions and results must be determined at the project and shall have the approval of the Architect/Engineer before being installed. The Contractor shall follow the drawings in laying out work and shall check drawings of the other trades to verify spaces in which work will be installed. Maintain maximum headroom and space conditions at all points. If directed by the General Contractor, Engineer and/or Architect, the Contractor shall, without extra charge, make reasonable modifications in the layout as needed to prevent conflict with work of other trades or for proper execution of the work.

D. These contract documents are complementary. What is called for by one shall be as binding as if called for by all. Materials or work described in words, which have well-known technical, or trade meaning shall be held to refer to such recognized standards. Incidental devices and accessories needed for complete, operational systems shall be provided even though they may not be indicated or identified in the documents.

E. If apparatus have been omitted, notify the Architects/Engineers of such belief. It is understood that bidder has included all required items and work in his bid, and will not if bid is successful, claim extra compensation for furnishing a complete and satisfactory system. If a particular item is called for or specified more than once in these contract documents, the higher grade shall be considered specified.

F. Should it appear that the character of the work is not sufficiently explained in these specifications or on the drawings, apply to the A/E for further information. Conform to the A/E's decision and directions as shall become part of these contract documents. The A/E reserves the right to be sole interpreter of the drawings and specifications, and all decisions shall be conclusive, final and binding on the parties.

G. Materials called for in these documents shall be new, unused equipment and of the latest recognized standards.

H. The work to be done under Division 26 is shown on the electrical drawings.

1.3 OUTLINE SCOPE OF WORK

A. The work under this contract, without limiting the generality thereof, includes all materials, labor, equipment, services, and transportation, unless otherwise specified, necessary to complete all systems of electrical wiring and equipment required by the drawings and/or as specified herein. It is the intent of this section and accompanying electrical drawings that these systems be furnished complete in every respect. The Electrical Contractor shall furnish all wiring, equipment and labor needed for a complete operating installation.

B. The Electrical Contractor shall fully indemnify the Owner against any damages, removals and alteration work. This is in addition to the requirements of the General Conditions of the Specifications.

C. The Electrical Contractor shall review architectural, interior design and all other trades plans, elevations and details prior to any work and identify any conflicts between furnishings, furniture, art-work, molding, casework, televisions, signage, awnings, canopies, diffusers, fixtures, etc.. and electrical, fire alarm, audio/visual and communications devices shown on the electrical plans and details. The Electrical Contractor shall prepare 8.5" x 11" sketches showing the conflicts and submit to the Architect for resolution prior to any work. Failure of the electrical contractor to coordinate, identify and obtain a field-directive on any conflict herein noted, that results in installed electrical work to be relocated to the Owner/Architects liking shall be the sole-responsibility of the Electrical Contractor. The Electrical Contractor shall assume and cover all costs associated with conflicts not coordinated, identified and submitted to the Architect, inclusive of material, labor, overtime pay, etc.. and shall not affect the project schedule.

1.4 ROUGH-IN

A. Verify final locations for rough-ins with field measurements and with the requirements of the actual equipment to be connected.

B. Refer to equipment specifications in Divisions 2 through 25 for rough-in requirements.

1.5 SURVEYS AND MEASUREMENTS

A. Base measurements, both horizontal and vertical, on established bench marks. Work shall agree with these established lines and levels. Verify measurements at site and check the corrections of same as related to the work.

B. Should the Contractor discover any discrepancy between actual measurements and those indicated, which prevents following good practice or the intent of the drawings and specifications, he shall notify the A/E.

1.6 EXAMINATION OF SITE

A. Prior to submitting bid, visit the site where the work is to be performed and the materials are to be delivered. Failure in this respect shall not excuse the Contractor from his obligation to supply and install the work in accordance with the plans and specifications and under all conditions, as they exist.

B. By submitting a bid, this Contractor warrants that all specification sections and drawings showing equipment for plumbing, heating, ventilation, air conditioning, electrical, and architectural, have been examined and is familiar with the conditions and extent of work affecting this contract.

1.7 EQUIPMENT AND MATERIALS

A. All equipment and materials for permanent installation shall be the products of recognized manufacturer's and shall be new, unless noted for re-use, without damaged, functional or aesthetic components.

B. New equipment and materials shall:
   1. Be Underwriters Laboratories, Inc. (UL) labeled and/or listed where specifically called for, or where normally subject to such UL labeling and/or listing services
   2. Be without blemish or defect.
   3. Be in accordance with the latest applicable NEMA standards.
   4. Be products, which will meet with the acceptance of the agency inspecting the electrical work. Where such acceptance is contingent upon having the products examined, tested and certified by UL or other recognized testing laboratory, the product shall be so examined, tested and certified.

C. For all equipment, which is to be installed but not purchased as part of the electrical work, the electrical work shall include:
   1. The coordination of their delivery.
   2. Their unloading from delivery trucks driven in to any point on the property line at grade level.
   3. Their safe handling and field storage up to the time of permanent placement in the project.
   4. The correction of any damage, defacement or corrosion to which they may have been subjected.
   5. Their field make-up and internal wiring as may be necessary for their proper operation.
   6. Their mounting in place, including the purchase and installation of all dunnage, supporting members and fastenings necessary to adapt them to architectural and structural conditions.

D. Equipment, which is to be installed but not purchased as part of the electrical work, shall be carefully examined upon delivery to the project. Claims that any of these items have been received in such condition that their installation will require procedures beyond the reasonable scope of the electric work will be considered only if presented in writing within one week of the date of delivery to the project of the items in question. The electric work includes all procedures, regardless of how extensive, necessary to put into satisfactory operation, all items for which no claims have been submitted as outlined above.

1.8 ELECTRICAL INSTALLATIONS

A. All materials and labor called for, specified in Division 26 of the specifications, and or shown on the electrical drawings furnished under this contract shall be provided under Division 16 unless called for otherwise in the Division 16 documents. The word "provide" as used in the Division 16 documents, shall mean to furnish, install, connect up, complete with all accessories ready for operation and warranted.

B. Coordinate electrical equipment and materials installation with other building components. Fully coordinate work with that of other trades. Furnish information in writing that is needed for the coordination of clearances, etc., with the work of others, and such information shall be given in a timely fashion so as not to impede the progress of two or more trades. Confer and resolve the conflict immediately. If so directed by the A/E, prepare composite drawings to resolve any space or clearance conflict.

C. Verify all dimensions by field measurements.

D. Arrange for chases, slots, and openings in other building components to allow for electrical installations.

E. Coordinate the installation of required supporting devices and sleeves to be set in poured in place concrete and other structural components, as they are constructed.

F. Sequence, coordinate, and integrate installations of electrical materials and equipment for efficient flow of the Work. Give particular attention to large equipment requiring positioning prior to closing-in the building.

G. Coordinate the cutting and patching of building components to accommodate the installation of electrical equipment and materials.

H. Where mounting heights are not detailed or dimensioned, the exact location shall be determined by the A/E, install electrical services and overhead equipment to provide the code and/or utility requirements.

I. Install electrical equipment to facilitate maintenance and repair or replacement of equipment components. As much as practical, connect equipment for ease of disconnecting, with minimum of interference with other installations.

J. Coordinate the installation of electrical materials and equipment above ceilings with suspension systems, mechanical equipment and systems, and structural components.

K. Coordinate connection of electrical systems with exterior underground and overhead utilities and services. Comply with requirements of governing regulations, franchised service companies, and controlling agencies. Provide required connection for each service.

L. Attention is directed to areas and items indicated on the drawings by the notations "HOLD", "N.I.C.", "BY OTHERS" and words of similar intent. The work indicated in these areas is shown for information and continuity only. Work or items furnished and installed in these areas solely for the convenience of this Contractor or others, without prior written approval of the Owner, shall be removed at the option of the Owner and at the Contractor's expense.

M. Provide all required staging and scaffolding for all the work under this section.

1.9 ALTERATION WORK

A. Maintain continuity of service in areas where occupancy is to be maintained during alterations. If it becomes necessary to disconnect or interrupt service, obtain written consent of the Owner, and only disconnect service at the convenience of, and with the consent of the Owner. A copy of the written request for a shutdown shall be forwarded to the A/E.

1.10 CUTTING AND PATCHING

A. Cutting and patching of electrical equipment, components, and materials specified under Division 26 (conduit, sleeves, equipment, etc.) shall be performed by Electrical Contractor.

B. Refer to the Conditions of the Contract (General and Supplementary) and Division 1 Section: "Cutting and Patching" for definitions, requirements, and procedures.

C. Cutting and patching of existing structures (thru walls, floors, ceilings, etc.) to accommodate equipment, components, and materials of all Contractors, including Mechanical and Electrical Contractors, shall be performed by General Contractor and/or his designated Subcontractor.

D. Cutting and patching of new structures (thru walls, floors, ceilings, etc.) to accommodate installation of ill-timed work or removal and replacement of defective work or work not conforming to requirements of Contract Documents, shall be performed by General Contractor and/or his designated Subcontractor and costs shall be back charged to appropriate trade Contractor.

E. Do not endanger or damage installed work through procedures and processes of cutting and patching.

F. Arrange for repairs required to restore other work, because of damage caused as a result of electrical installations.

G. Arrange to have ducts, raceways, conduit, panelboards, boxes, and such other pertinent parts, set in place ahead of construction work so that they will be built-in with structures and eliminate need for cutting and patching. Failure to conform to this paragraph will require that this Contractor perform any cutting and patching required for his work at his expense. Cutting shall be neatly finished to match adjoining work in a manner acceptable to the A/E. Cutting and patching shall not affect the fire rating of walls or structural parts. Cutting and patching required to correct work, due to error or negligence of the Contractor, or to defects in his material or workmanship, shall be corrected at no additional cost to the Owner. Patching shall meet or exceed quality of adjacent surfaces. Cutting must be accomplished as not to weaken adjacent structural members and must be approved by the Structural Engineer before proceeding.

H. Perform cutting, fitting, and patching of electrical equipment and material required to:
   1. Uncover work to provide for installation of ill-timed work.
   2. Remove and replace defective work.
   3. Remove and replace work not conforming to requirements of the contract documents.
   4. Remove samples of installed work as specified for testing.
   5. Install equipment and materials in existing structures.
   6. Upon written instructions from the A/E, uncover and restore work to provide for A/E observation of concealed work.

I. Cut, remove and legally dispose of selected electrical equipment, components and materials as indicated, including, but not limited to, removal of electrical items indicated to be removed and items made obsolete by the work.

J. Protect the structure, furnishing, finishes, and adjacent materials not indicated or scheduled to be removed. Protect the electrical work and the work of others in a manner best suited to the particular case. Correct any damage done to any work at no additional cost.

K. Provide and maintain temporary partitions or dust barriers adequate to prevent the spread of dust and dirt to adjacent areas.

L. Locate, identify, and protect electrical services passing through areas that are to under-go remodeling or demolition. Electrical services serving other areas required to be maintained, and transit services must be interrupted, provide temporary services for the affected areas and notify the Owner prior to changeover.

1.11 SUBMITTALS

A. Within fifteen (15) business days after the date of notice to proceed and before purchasing any materials or equipment, submit for approval a complete list, in six (6) copies, of all materials to be incorporated in the work.

B. Shop drawings/manufacturer's cuts are required for:
   1. Wire & Cable.
   2. Lighting Fixtures.
   3. Panelboards.
   4. Disconnect Switches.
   5. Wiring Devices and Plates.
   6. Fire Alarm System.
   7. Fire Stopping Materials.
   8. Seismic Restraint Components.

C. After the list has been processed, submit complete shop drawings of all equipment. These shop drawings submittals shall be submitted within thirty days after the processing date of the original submittal.

D. All submittals shall be complete and submitted electronically to all applicable parties. No consideration will be given to partial submittals except with prior approval. No consideration will be given to faxed submittals.

E. Explanation of Shop Drawing Stamp:
   1. Approved: indicates that we have not found any reason why this item should not be acceptable within the intent of the documents.
   2. Approved with Comments: indicates that we have found questionable components which, if corrected or otherwise explained, make the product acceptable.
   3. Resubmit for Final Review: indicates that this item should be resubmitted for approval before further processing.
   4. Does Not Conform: indicates that the item will not meet the intent of the Contract.

F. No shop drawing stamp or note shall constitute an order to fabricate or ship. Such notification can only be performed by the Project Manager for construction, the Contractor scheduling his own work, or the Owner.

G. Submittal of shop drawings, product data, will be reviewed only when submitted by the Contractor. Data submitted from Sub-contractors and material suppliers directly to the A/E will not be processed.

H. If shop drawing is not in compliance after two submissions, a third submission for the same manufacturer will not be considered for review.

I. Check shop drawings and other submittals to assure compliance with contract documents before submittal to A/E.

J. Review of shop drawings is final and no further changes shall be considered without written application. Shop drawing review does not apply to quantities, dimensions, nor relieve this Contractor of his responsibility for furnishing materials or performing his work in full compliance with these contract drawings and specifications. Review of these shop drawings shall not be considered a guarantee of the measurements of this building or the conditions encountered.

K. General requirements for the substitution of equipment and submittal of shop drawings as follows. If apparatus, systems or materials are substituted for those specified, and such substitution necessitates changes in, or additional connections, wiring, supports, or construction, it shall be provided by this Contractor at no additional cost to the Owner. This Contractor shall assume all cost and entire responsibility thereof. The approval of substituted equipment does not relieve the contractor of his/her responsibility of shop drawing errors related to details, sizes, quantities, wiring diagram arrangements and dimensions which deviate from the Specifications, and/or job conditions as they exist. It is the contractor's responsibility to submit only those items that meet the specified apparatus, systems and material. Should any non-conformance code items be installed, they shall be replaced by this Contractor at no additional cost to the Owner. The construction means and methods used in the project shall be reviewed and approved through the local building department or a deputy inspector to insure compliance with the current codes, project specifications and general building practices.

L. Coordination drawings shall be submitted and shall show all HVAC, Electrical, Plumbing and Fire Protection systems superimposed in order to identify conflicts and ensure inter-coordination of all trades. Coordination drawings shall be initiated under this Section of the Specifications. It is this Contractors responsibility for preparation of project coordination drawings showing the installation of all electrical equipment, switchgear, motor control centers, panelboards, transformers, transfer switches, disconnect switches, enclosed circuit breakers, conduits, outlets, switches and accessories to be provided under this Section of the Specifications. These drawings shall be prepared at not less than 3/8 in. = 1 ft. scale, and shall show building room layouts, structural elements, ductwork and lighting layouts of function. A reproducible copy of each drawing prepared shall then be submitted to the Mechanical, Plumbing and Sprinkler Contractors, who shall be responsible to coordinate his equipment and systems and shall show these on the drawings submitted. After this Contractor has fulfilled his obligation, he shall notify all other Contractors. After each drawing has been coordinated between trades, each trade shall sign each drawing, indicating acceptance of the installation. This Contractor shall then print the coordination original and these prints submitted through the General Contractor to the architect for review and comment, similar to shop drawings. Comments made on these drawings shall result in a correction and re-submittal of the drawings. A Subcontractor who fails to promptly review and incorporate his work on the drawings shall assume full responsibility of any installation conflicts affecting his work and of any schedule ramifications. Review of coordination drawings shall not diminish responsibility under this Contract for final coordination of installation and maintenance clearances of all systems and equipment with Architectural, Structural, Mechanical, and Electrical Contractors.

1.12 PRODUCT OPTIONS AND SUBSTITUTIONS

A. Refer to the Conditions of the Contract (General and Supplementary) and Division 1 for definitions, requirements, and procedures.

B. If materials of equipment are substituted for specified items that alter the systems shown or its physical characteristics, or which have different operating characteristics, clearly note the alterations or differences and call it to the attention of the A/E. Under no circumstances shall substitutions be made unless identical material or equipment has been successfully operated for at least three consecutive years.

C. All substitution made by the Contractor shall require the Contractor to fully coordinate the substitution with other trades. The Contractor must make any modifications required by the substitution at no additional cost to the Owner. In addition the Contractor must notify the A/E of any changes required and obtain approval for the changes. The review of the shop drawings by the A/E shall not relieve the Contractor from his responsibility as set forth in this specification.

1.13 NAMEPLATE DATA

A. Provide permanent operational data nameplate on each item of power operated equipment, conduits with pull string, indicating manufacturer, product name, model number, serial number, capacity, operating and power characteristics, labels of tested compliances, and similar essential data. Locate nameplates in a readily accessible location.

1.14 DELIVERY STORAGE AND HANDLING

A. Deliver products to project properly identified with names, model numbers, types, grades, compliance labels, and similar information needed for distinct identifications; adequately packaged and protected to prevent damage during shipment, storage and handling.

B. Store equipment and materials at the site, unless off-site storage is authorized in writing. Protect stored equipment and materials from damage. All devices shall be stored in a locked room. Assume responsibility for the devices until the date of final inspection.

C. Coordinate deliveries of electrical materials and equipment to minimize construction site congestion. Limit each shipment of materials and equipment to the items and quantities needed for the smooth and efficient flow of installations.

1.15 RECORD DOCUMENTS

A. As work progresses and for the duration of Contract, maintain a complete and separate set of prints of Contract Drawings at job site at all times. This contractor shall provide all material and labor for temporary electrical service per the local power company's requirements and standards with all necessary panelboards, disconnect switches, transformers, conduit, wiring, etc. as required. This contractor shall pay all associated costs, up front.

B. Where temporary electrical service cannot be obtained from the local power company, this contractor shall provide a temporary, on-site, electric generator with all necessary panelboards, disconnect switches, transformers, conduit, wiring, etc. as required. The fuel used for the generator shall be provided and paid for by this Contractor.

C. This contractor shall provide a distribution system with circuits for receptacles and lighting as required for construction. This contractor shall maintain the temporary electrical system during construction and remove the system when construction is complete.

D. Under this section of the specifications, this Contractor shall provide and maintain temporary lighting based on using not less than one 100-watt lamp for each 100 square feet of building floor area and one duplex GFCI receptacle for each 200 square feet of building floor area. Where higher lighting intensities are required by law or State laws or otherwise specified, the above specified wattage shall be increased to provide the increase intensities.

E. This contactor shall provide temporary power and telephone services from the local telephone company for site trailers, fax machines, computers, etc., per the general contractor's direction.

F. The service shall incorporate ground fault protection and comply with NEC Article 527 and OSHA requirements.

1.23 PERMITS

A. Obtain all required electrical permits and pay all fees for same.

B. Provide to Engineer, in duplicate, a certificate of final inspection from the authority having jurisdiction for the electrical and systems.

1.24 OPERATING, INSTRUCTION, AND MAINTAINANCE MANUALS

A. Refer to Section 017000 - CONTRACT CLOSEOUT for submittal procedures pertaining to operating and maintenance manuals.

B. Each copy of the approved operating and maintenance manual shall contain copies of approved shop drawings, equipment literature, cuts, bulletins, details, equipment and engineering data sheets and typewritten instructions relative to the care and maintenance for the operation of the equipment, all properly indexed.

1.25 BIDDERS REPRESENTATION

A. By the act of submitting a bid for the proposed contract, the Bidder represents that:
   1. The Bidder and all subcontractors the Bidder intends to use have carefully and thoroughly reviewed the drawings, specifications and other construction contract documents and have found them complete and free from ambiguities and sufficient for the purpose intended; further that,
   2. The Bidder and workmen, employees and subcontractors the Bidder intends to use are skilled and experienced in the type of construction represented by the construction contract documents bid upon; further that,
   3. Neither the Bidder nor any of the Bidder's employees, agents, intended suppliers or subcontractors have relied upon any verbal representations, allegedly authorized or unauthorized from the Owner, or the Owner's employees or agents including architects, engineers or consultants, in assembling the bid figure; and further that,
   4. The bid figure is based solely upon the construction contract documents and properly issued written addenda and not upon any other written representation.

1.26 UTILITY COMPANY & AGENCY COORDINATION

A. This section includes, but is not limited to coordination with the following utilities, agencies and authorities having jurisdiction:
   1. Power Company: This Contractor shall coordinate with the local utility power company and provide all material & labor required to comply with the utility power company's requirements and standards, prior to ordering any electrical equipment, such as, switchgear, panels, transformers, disconnect switches, SPD, etc. This Contractor shall confirm metering sequence (hot or cold) and make the appropriate provisions and/or changes for the utility companies approved metering sequence arrangement. Notify Engineer of discrepancies between the plans and the local utility company's standards. No extra compensation will be given for corrections required to this Contractor for failure to coordinate with the utility company, but corrections shall be made. All A.I.C. ratings, grounding, bonding, concrete pads & curbs, protective bollards, raceways, ductbank, manholes, etc., shall be in accordance with the utility company's standards.
   2. Telephone Company: This Contractor shall coordinate with the local telephone company and provide all material & labor required to comply with the telephone company's requirements and standards, prior to ordering any electrical or telephone equipment, such as, terminal boards, grounding systems, raceways, ductbanks, manholes, etc. This Contractor shall confirm the telephone company's requirements and provide as necessary. Notify Engineer of discrepancies between the plans and the telephone company's standards. No extra compensation will be given for corrections required to this Contractor for failure to coordinate with the telephone company, but corrections shall be made.
   3. Cable TV Company: This Contractor shall coordinate with the local cable TV company and provide all material & labor required to comply with the cable TV company's requirements and standards, prior to ordering any electrical or cable TV equipment, such as, terminal boards, grounding systems, raceways, ductbanks, manholes, etc. This Contractor shall confirm the cable TV company's requirements and provide as necessary. Notify Engineer of discrepancies between the plans and the cable TV company's standards. No extra compensation will be given for corrections required for failure to coordinate with the cable TV company, but corrections shall be made.
   4. Local Fire Marshal: This contractor shall verify with the local fire alarm official, the type of master-box or municipal connection required for this project. This contractor shall provide all material & labor to comply with the local municipality. Notify Engineer of discrepancies between the plans and the municipality's standards. No extra compensation will be given for corrections required for failure to coordinate with the municipality, but corrections shall be made.
   5. Electrical Inspector: Review plans and specifications with the local electrical and/or wiring inspector(s). Obtain and pay for all permits.
   6. Building Inspector: Review plans and specifications with the local building inspector, if not done so by the General Contractor.
   7. OSHA Representative: Review plans and specifications with the local OSHA representative, if not done so by the General Contractor.
   8. Dig Safe: This contractor shall notify and coordinate with Dig Safe prior to any excavation; digging; trenching; grading; tunneling; augering; boring; drilling; pile driving; plowing-in or pulling-in pipe, cable, wire, conduit, or other sub-structure; backfilling; demolition; and blasting related to this Contractor.

B. The Electrical Contractor shall pay for all permits, inspections, labor, material and fees associated with the various Utility Companies coordination requirements mentioned in this section and for this Contractor's work under this project.

C. The Electrical Contractor shall carry a minimum of $15,000 of utility expenses. In the case the expenses are less than the carried expense, the difference will be credited to the owner. In the case the utility charges are more than the carried expense, the remaining payment shall be coordinated between the Electrical Contractor, General Contractor and Owner.

D. HVAC, Plumbing, Fire Protection, and Electrical Drawings are diagrammatic. They indicate general arrangements of mechanical and electrical systems and other work. They do not show all offsets required for coordination nor do they show the exact routings and locations needed to coordinate with structural and other trades and to meet Architectural requirements.

E. In all spaces, prior to installation of visible material and equipment, including access panels, review Architectural Drawings for exact locations and where not definitely indicated, request information from Architect. Where the electrical work shall interfere with the work of other trades, assist in working out the space conditions to make satisfactory adjustments before installation. Without extra cost to the Owners, make reasonable modifications to the work as required by normal structural interferences. Pay the General Contractor for additional openings or relocating and/or enlarging existing openings through concrete floors, walls, beams and roof required for any work which was not properly coordinated. Maintain maximum headroom at all locations. All piping, duct, conduit, and associated components to be as tight to underside of structure as possible.

F. If any electrical work has been installed before coordination with other trades so as to cause interference with the work of such trades, all necessary adjustments and corrections shall be made by the trades involved without extra cost to the Owners.

G. Where conflicts or potential conflicts exist and engineering guidance is desired, submit sketch of proposed resolution to Architect and Engineer for review and approval.

PART 2 - PRODUCTS

2.1 CONDUIT

A. Minimum Size: ¾-inch, unless otherwise specified.

B. Underground Installations:
   1. More than Five Feet from Foundation Wall: Use thick wall nonmetallic conduit concrete encased.
   2. Within Five Feet from Foundation Wall: Use rigid steel conduit concrete encased.
   3. In or Under Slab on Grade: Use plastic coated conduit.
   4. Minimum Size: 1-inch.

C. Outdoor Locations, Above Grade: Use rigid steel conduit.

D. In Slab Above Grade:
   1. Use rigid steel conduit.
   2. Maximum Size Conduit in Slab: ¾ inch (19 mm); ½ inch (13 mm) for conduits crossing each other.

E. Wet and Damp Locations: Use rigid aluminum conduit.

F. Dry Locations:
   1. Concealed and in Cable-Tray: Use metal clad (MC) cable (see Division 1)
   2. Exposed: (Unfinished or utility spaces) Use electrical metallic tubing.

G. Metal conduit: Rigid Steel Conduit shall comply with ANSI C80.1 and be heavy wall zinc coated steel. Rigid Aluminum Conduit shall comply with ANSI C80.5. Intermediate Metal Conduit (IMC) shall be rigid steel. Fittings and Conduit Bodies shall comply with ANSI/NEMA FB 1 and material to match conduit. Acceptable manufacturers are Western Tube and Conduit Company, Allied Tube and Conduit Company and Triangle Wire and Cable, Inc.

H. Flexible metal conduit shall be interlocked aluminum construction. Fittings shall comply with ANSI/NEMA FB 1. Acceptable manufacturers are AFC Cable Systems, Electri-Flex Company and Eastern Flexible Conduit Technologies. All flexible conduits shall include a grounding conductor.

I. Electrical metallic tubing (EMT) shall comply with ANSI C80.3; galvanized zinc coated steel tubing. Fittings and Conduit Bodies shall comply with ANSI/NEMA FB 1; steel, compression or set screw type. Acceptable manufacturers are Western Tube and Conduit Company, Allied Tube and Conduit Company and Triangle Wire and Cable, Inc.

J. Nonmetal conduit shall comply with NEMA TC 2; Schedule 40 PVC, or as indicated on plans. Fittings and Conduit Bodies shall comply with NEMA TC 3. Acceptable manufacturers are Carlon or approved equal.

K. Flexible nonmetallic conduit (Sealtite) shall be UL and CSA listed for purpose specified and shown. Acceptable manufacturers are Carlon or approved equal.

L. Install conduit in accordance with NECA "Standard of Installation." Install nonmetallic conduit in accordance with manufacturer's instructions.

M. Arrange supports to prevent misalignment during wiring installation. Support conduit using coated steel or malleable iron straps, lay-in adjustable hangers, clevis hangers, and split hangers. Group related conduits; support using conduit rack. Construct rack using steel channel; provide space on each for 25 percent additional conduits. Fasten conduit supports to building structure and surfaces under provisions of Division 1. Do not support conduit with wire or perforated pipe straps. Remove wire used for temporary supports. Do not attach conduit to ceiling support wires.

N. Arrange conduit to maintain headroom and present neat appearance. Route exposed conduit parallel and perpendicular to walls. Route conduit installed above accessible ceilings parallel and perpendicular to walls. Route conduit in and under slab from point-to-point. Do not cross conduits in slab.

O. Maintain adequate clearance between conduit and piping. Maintain 12-inch (300 mm) clearance between conduit and surfaces with temperatures exceeding 104 degrees F (40 degrees C).

P. Cut conduit square using saw or pipe cutter; de-burr cut ends. Bring conduit to shoulder of fittings; fasten securely. Join nonmetallic conduit using cement as recommended by manufacturer. Wipe nonmetallic conduit dry and clean before joining. Apply full even coat of cement to entire area inserted in fitting. Allow joint to cure for 20 minutes, minimum. Use conduit hubs or sealing locknuts to fasten conduit to sheet metal boxes in damp and wet locations and to cast boxes.

Q. Install no more than equivalent of three 90-degree bends between boxes. Use conduit bodies to make sharp changes in direction, as around beams. Use hydraulic one-shot bender to fabricate or factory elbows for bends in metal conduit larger than 2-inch (50 mm) size.

R. Avoid moisture traps; provide junction box with drain fitting at low points in conduit system. Provide suitable fittings to accommodate expansion and deflection where conduit crosses seismic, control and expansion joints. At expansion and deflection fittings shall have a ground strap. Provide suitable pull string in each empty conduit except sleeves and nipples. Use suitable caps to protect installed conduit against entrance of dirt and moisture.

S. Ground and bond conduit under provisions of NEC 250.

2.2 SURFACE RACEWAYS

A. Multi-outlet assemblies shall be steel channel with fitted cover suitable for use as multi-outlet assembly. There shall be two compartments separated be a steel divider one for power wiring and one for tele/data wiring. Provide flush feed box equal to Wiremold #WSA42-4 with backfeed kit #WSA86. Color of surface raceway per the Architect and Owner.

B. Provide 125-volt, 20 amp duplex receptacles with ground slot spaced 12 inches (300 mm) on center or as indicated on the plans. Color of receptacles per the Architect and Owner.

C. Provide tele/data outlets spaced 12 inches (300 mm) on center or as indicated on the plans. The number of jacks per tele/data outlet as indicated or as required per the Owner. Color of outlets per the Architect and Owner.

D. Provide cover plates equal to Wiremold #4049.

E. Coordinate with Architect and Owner for exact height of surface raceway prior to installing any material. De-rate conductors as required per code. Coordinate with furniture supplier and millwork supplier to avoid conflicts with counter wall supports and surface raceways. Coordinate bushed openings in counters for cord & plug connections, where receptacles will be installed under counters.

F. Acceptable manufacturers are Wiremold Company, Hubbell or approved equal.

G. Fittings: Furnish manufacturer's standard couplings, elbows, outlet and device boxes, and connectors.

H. Wireways shall be steel with rust inhibiting primer coating with gray enamel finish for general wiring in unfinished spaces. Provide as necessary per the job conditions.

I. Install and mount products in accordance with the manufacturer's instructions. Use flat-head screws, clips, and straps to fasten raceway channel to surfaces. Mount plumb and level. Use suitable insulating bushings and inserts at connections to outlets and corner fittings. Close ends of wireway and unused conduit openings. Ground and bond under provisions of NEC 250.

2.3 DUCT BANK

A. Verify that field measurements are as indicated. Verify routing and termination locations of duct bank prior to excavation for rough-in. Verify locations of manholes prior to excavating for installation. Duct bank routing is shown in approximate locations unless dimensions are indicated. Route as required to complete duct system. Manhole locations are shown in approximate locations unless dimensions are indicated. Locate as required to complete duct bank system.

B. Underground Warning Tape: Provide 3-inch-wide plastic tape 12" below finished grade, colored yellow with suitable warning legend describing buried electrical lines; Model #47586 as manufactured by Seton or equal.

C. Install duct to locate top of duct bank at 30" below finished grade or at depths as indicated on drawings. Install duct with minimum slope of 4-inches per 100-feet. Slope duct away from building entrances.

D. Provide suitable fittings to accommodate expansion and deflection where required. Terminate duct at manhole entries using end bell. Stagger duct joints vertically in concrete encasement 6 inches minimum. Use suitable separators and chairs installed not greater than 4 feet (1200 mm) on centers. Band ducts together before backfilling and placing concrete. Securely anchor duct to prevent movement during concrete placement.

E. Place concrete as required and under provisions of Division 3. Use mineral pigment to color concrete red. Provide minimum 3-inch concrete cover at bottom, top, and sides of duct bank. Provide two No. 4 steel reinforcing bars in concrete ductbank under paved areas. Connect to existing concrete encasement using dowels. Connect to manhole wall using dowels.

F. Provide suitable pull string in each empty duct except sleeves and nipples. Swab duct. Use measured resistance is greater than 5 ohms indoor or 10 ohms outdoor, determine and correct the cause.

G. During the progress or completion of the work it shall be subject to the inspection of the Owner and to such other inspectors, as may have jurisdiction, including those of the Electric Company, Fire Department and the Telephone Company.

H. The Contractor shall be responsible for correct voltages, tap settings, trip settings and correct phasing on all equipment. Secondary voltages shall be measured at the line side of the main breakers with the breakers in an open position, at panelboards, and at such other location on the distribution systems and branch circuits as directed by the Engineer.

I. At completion of the work, Contractor shall submit to the Owner's representative in writing a statement stating: (1) that the work is complete; (2) that the entire installation is in accordance with the drawings and specifications; (3) that preliminary tests have been made; and (4) that the work is ready for final inspection and test.

J. A final inspection of the installation to determine compliance with the drawings and specifications will be made by the Owner's representative. Work will be checked for quality of materials, quality of workmanship, proper installation and finished appearance. The electrical contractor shall provide the services of the project electrical foreman for inspection purposes. The foreman shall remove and reinstall wiring devices, junction box covers, panelboard trims, switchboard covers, terminal box covers, ceiling tiles, lighting fixtures, etc. as required to facilitate any inspections required by the Owner's representative.

K. The Contractor shall arrange and conduct operating tests on all equipment in the presence of the Owner's representative. The components parts of systems and the various systems shall be demonstrated to operate in accordance with the requirements and intent of this specification. Any non-complying or defective materials or workmanship disclosed as a result of the inspection and tests shall be corrected promptly by the Contractor, and the tests repeated as often as necessary until approved and accepted by the Owner's representative.

L. The Contractor shall visit the site to acquaint himself with existing conditions. No extra compensation will be paid for failure to comply with this paragraph.

M. The Electrical Contractor shall provide supervision, labor, materials, tools, test equipment, and all other equipment or services and expenses required to test, adjust, set, calibrate, and operationally check work and components of the electrical systems and circuitry throughout this section.

N. The electrical contractor shall pay for all tests including expences incident to retests occasioned by defects and failures of equipment to meet specifications at no additional cost to the owner.

O. Any defects or deficiencies discovered in any of the electrical work shall be corrected at no cost to the owner.

P. All testing shall be compatible with the manufacturer's installation instructions.

1.21 SEISMIC RESTRAINT

A. It is the intent of this seismic specification to keep all electrical building system components in place during a seismic event.

B. All electrical systems must be installed in strict accordance with seismic codes, component manufacturer's and building construction standards. Whenever a Conflict occurs between the manufacturer's or construction standards, the most stringent shall apply.

C. This contractor shall engage a professional structural engineer registered in the jurisdiction of this project to review the entire installation to determine all seismic restraint requirements and methods. Contractor shall submit a report outlining the structural engineer's review as well as seismic restraint shop drawings and supporting calculations prepared by the professional structural engineer for review by the Architect.

D. Seismic restraints shall be designed in accordance with seismic force levels as detailed in the applicable building code.

1.22 TEMPORARY LIGHT AND POWER

A. Under this Section of the specifications, this Contractor shall provide temporary electric service, sized suitable for construction for each trade. This contractor shall provide all material and labor for temporary electrical service per the local power company's requirements and standards with all necessary panelboards, disconnect switches, transformers, conduit, wiring, etc. as required. This contractor shall pay all associated costs, up front.

B. Where temporary electrical service cannot be obtained from the local power company, this contractor shall provide a temporary, on-site, electric generator with all necessary panelboards, disconnect switches, transformers, conduit, wiring, etc. as required. The fuel used for the generator shall be provided and paid for by this Contractor.

C. This contractor shall provide a distribution system with circuits for receptacles and lighting as required for construction. This contractor shall maintain the temporary electrical system during construction and remove the system when construction is complete.

D. Under this section of the specifications, this Contractor shall provide and maintain temporary lighting based on using not less than one 100-watt lamp for each 100 square feet of building floor area and one duplex GFCI receptacle for each 200 square feet of building floor area. Where higher lighting intensities are required by law or State laws or otherwise specified, the above specified wattage shall be increased to provide the increase intensities.

E. This contactor shall provide temporary power and telephone services from the local telephone company for site trailers, fax machines, computers, etc., per the general contractor's direction.

F. The service shall incorporate ground fault protection and comply with NEC Article 527 and OSHA requirements.

1.23 PERMITS

A. Obtain all required electrical permits and pay all fees for same.

B. Provide to Engineer, in duplicate, a certificate of final inspection from the authority having jurisdiction for the electrical and systems.

1.24 OPERATING, INSTRUCTION, AND MAINTAINANCE MANUALS

A. Refer to Section 017000 - CONTRACT CLOSEOUT for submittal procedures pertaining to operating and maintenance manuals

Provide quarterly testing in conformance with the State Fire Code latest addition.

2.19 DATA

A. Service: Provide incoming data (internet) service raceways and cable as required by the Owner's representative and/or vendor or as required by the serving internet company from the utility pole to the building. Provide ¾" plywood board (and one double duplex outlet) in weather-proof cabinet for internet service equipment. Provide a 3/4-inch-thick plywood board (8'-0" wide by 4'-0" high) inside of building. All plywood backboards shall be fire-retardant-treated and stamped FRT, securely anchored to the cabinet or wall. Provide a copper ground bar (1/4" thick x 4" high x 36" long) with wall mounting brackets, insulators and a #6AWG copper exothermically welded pigtail in each data cabinet or wall. Connect pig tail to building electrical service grounding system per the internet company's requirements.

B. Apartments: The Electrical Contractor shall provide and install internet outlet backboxes per the Owner's specifications and direction as shown on the plans. Install ¾" EMT conduit with pull string from backbox to terminal board. Provide bushed endcap on end of conduit). Provide a copper ground bar (1/4" thick x 2" high x 12" long) with wall mounting brackets, insulators and a #6AWG copper exothermically welded pigtail in each. Connect pig tail to ground bar in apartments panelboard.

C. The Electrical Contractor shall provide and install data outlet backbox per the Owner's specifications and direction. Install ¾" EMT conduit with pull string from backbox to above accessible ceiling. Provide bushed endcap on conduit (above ceiling end of conduit).

2.20 TELEPHONE

A. Service: Provide incoming telephone service raceways and cable as required by the Owner's representative and/or vendor or as required by the serving telephone company from the utility pole to the building. Provide ¾" plywood board (and one double duplex outlet) in weather-proof cabinet for telephone service equipment. Provide a 3/4-inch-thick plywood board (8'-0" wide by 4'-0" high) inside of building. All plywood backboards shall be fire-retardant-treated and stamped FRT, securely anchored to the cabinet or wall. Provide a copper ground bar (1/4" thick x 4" high x 36" long) with wall mounting brackets, insulators and a #6AWG copper exothermically welded pigtail in each telephone cabinet or wall. Connect pig tail to building electrical service grounding system per the telephone company's requirements.

B. Apartments: The Electrical Contractor shall provide and install telephone outlet backboxes per the Owner's specifications and direction as shown on the plans. Install ¾" EMT conduit with pull string from backbox to terminal board. Provide bushed endcap on end of conduit). Provide a copper ground bar (1/4" thick x 2" high x 12" long) with wall mounting brackets, insulators and a #6AWG copper exothermically welded pigtail in each. Connect pig tail to ground bar in apartments panelboard.

C. The Electrical Contractor shall provide and install data outlet backbox per the Owner's specifications and direction. Install ¾" EMT conduit with pull string from backbox to above accessible ceiling. Provide bushed endcap on conduit (above ceiling end of conduit).

PART 3 - EXECUTION

3.1 BASIC REQUIREMENTS

A. Adhere to best industry practice and the following:
1. All work shall be concealed.
2. Route circuitry runs embedded in concrete to coordinate with structural requirements.
3. Equip each raceway intended for the future installation of wire or cable with a nylon pulling cord 3/16" in diameter and clearly identify both ends of the raceway.
4. Provide all outlet boxes, junction boxes, and pull boxes for proper wire pulling and device installation. Include those omitted from the drawings due to symbolic methods of notation.
5. Utilize lugs of the limited type to make connections at both ends of cables installed on the line side of main service overcurrent and switching devices. Provide cable limiters for each end of each service entrance cable.
6. Beyond the termination of raceways, fireproof the following:
   a. All wires and cables within pad-mounted transformer enclosure.
   b. All service feeder cables ahead of main service overcurrent protection devices, and elsewhere where not in raceways.
7. Fireproofing of wires and cables shall be by means of a half-lapped layer of arcproof or by means of sleeving of a type specifically manufactured for the purpose. Ends of tape or sleeving shall be severed with twine. Fireproofing shall be extended up into raceways. After conductors have been finally shaped into their permanent configuration, fireproofing tape or sleeving shall be coated with silicate of soda (water glass). Fireproofing shall be applied in an overall manner to raceway groupings of conductors.
8. Provide all sleeves through fireproof and waterproof slabs, walls, etc., required for electric work.
9. Provide waterproof sealing for the sleeves through waterproof slabs, walls, etc.
10. Provide fireproof sealing for the sleeves through fireproof walls, slabs, etc.
11. Provide fireproof sealing for the openings in fireproof walls, slabs, etc., resulting from removal of existing electrical sleeves, conduits, poke-thru's etc.
12. No splicing of wires will be permitted in the Fire Alarm System.
13. Bundle wiring passing through pull boxes and panelboards in a neat and orderly manner with plastic cable ties. Cable ties shall be by Ty-Raps as manufactured by Thomas & Betts, Holub Industries Inc., Quick Wrap, Bundy Unirap, or equal.
14. Turn branch circuits and auxiliary system wiring out of wiring gutters at 90 degrees to circuit breakers and terminal lugs.

3.2 TESTING REQUIREMENTS & INSTRUCTIONS

A. Where any repairs, modifications, adjustments, tests or checks are to be made, the Contractor shall contact the Engineer to determine if the work should be performed by or with the Manufacturer's Representative.

B. Tests are to:
1. Provide initial equipment/system acceptance.
2. Provide recorded data for future routine maintenance and troubleshooting.
3. Provide assurance that each system component is installed satisfactorily and can be expected to perform, and continue to perform its specified function with reasonable reliability throughout the life of the facility.

C. At any stage of construction and when observed, any electrical equipment or system determined to be damaged, or faulty, is to be reported to the Engineer. Corrective action by the Contractor requires prior Engineer approval, retesting, and inspection.

D. When the electrical tests and inspections specified or required within Division 16 are completed and results reported, reviewed, and approved by the Engineer, the Contractor may consider that portion of the electrical equipment system or installation electrically complete. The Contractor will then affix appropriate, approved, and dated completion or calibration labels to the tested equipment and notify the Engineer of electrical completion. If the Engineer finds completed work unacceptable, he will notify the Contractor in writing of the unfinished or deficient work, with the reason for his rejection, to be corrected by the Contractor. The Contractor will notify the Engineer in writing when exceptions have been corrected. The Contractor will prepare a "Notification or Substantial Electrical Completion" for approval by the Engineer following Engineer's acceptance of electrical completion. If later in-service operation or further testing identified problems attributable to the Contractor, these will be corrected by the Contractor, at no additional cost to the Authority.

E. Grounding Systems:
1. Test main building loops and major equipment grounds to remote earth, directly referenced to an extremely low resistance (approximately 1 ohm) reference ground benchmark. Perform a visual inspection of the systems, raceway and equipment grounds to determine the adequacy and integrity of the grounding. Ground testing results shall be recorded, witnesses, and submitted to the Engineer.
2. Perform ground tests using a low resistance, null-balance type ground testing ohmmeter, with test lead resistance compensated for. Use the type of test instrument which compensates for potential and current rod resistances.
3. Test each ground rod and measure ground resistance. If resistance is not 10 ohms or less, drive additional rods to obtain a resistance of 10 ohms or less. Submit tabulation of results to Engineer. Include identification of electrode, date of reading and ground resistance valve in the test reports.
4. Test each building and major equipment grounding system for continuity of connections and for resistance. Ground resistance of conduits, equipment cases, and supporting frames, shall not exceed 5 ohms to ground. Submit all readings to the Engineer.
5. Where ground test results identify the need for additional grounding conductors or rods that are not indicated or specified, design changes will be initiated to obtain the acceptable values. The Contractor is responsible for the proper installation of the grounding indicated and specified.
6. Operating Instructions: Furnish operating instructions to Owner's designated representative with respect to operations, functions and maintenance procedures for equipment and systems installed. Cost of such instruction up to a full five (5) days of Electrical Subcontractor's time shall be included in contract. Cost of providing a Manufacturer's Representative at site for instructional purposes shall also be included.

3.3 BRANCH CIRCUITRY

A. For all lighting and appliance branch circuitry, raceway sizes shall conform to industry standard maximum permissible occupancy requirements except where these are exceeded by other requirements specified elsewhere.

B. Circuits shall be balanced on phases at their supply as evenly as possible.

C. Feeder connections shall be in the phase rotation which establishes proper operation for all equipment supplied.

D. Reduced size conductors indicated for any feeders shall be taken as their grounding conductors.

E. Feeders consisting of multiple cables and raceways shall be arranged such that each raceway of the feeder contains one (1) cable for each leg and one (1) neutral cable, if any.

F. For circuitry indicated as being protected at 20 Amps or less, abide by the following:
1. All 20 amp, 120/208 volt, 3-phase, 4-wire combined branch circuit homeruns shall be provided with a #8 AWG neutral conductor.
2. Minimum conductor size shall be No. 12 AWG cooper.
3. Conductors operating at 120 volts extending in excess of 100 ft. or at 277 volts extending in excess of 200 ft., or the last outlet or fixture tap shall be No. 10 AWG cooper throughout.
4. Lighting fixtures and receptacles shall not be connected to the same circuit.

G. Type MC Cable Installation:
1. Where cable is permitted under the products section, the installation of same shall be done in accordance with code and the following:
   a. Cable shall be supported in accordance with code. Tie wire is not an acceptable means of support. Cable supports such as Caddy WMX-6, MX-3, and clamps such as Caddy 449 shall be used. Where cables are supported by the structure and only need securing in place, then ty-raps will be acceptable. Ty-raps are not acceptable as a means of support. All fittings, hangers, and clamps for support and termination of cables shall be of type specifically designed for use with cable, i.e., romex connectors not acceptable.
   b. Armor of cable shall be removed with rotary cutter device equal to roto-split by Seatek Co.; not with a hacksaw.
   c. Use split "Insuliner" sleeves at terminations.

3.4 REQUIREMENTS GOVERNING ELECTRICAL WORK IN DAMP OR WET LOCATIONS

A. Outlets and outlet size boxes shall be of galvanized cast ferrous metal only.

B. The finish of threaded steel conduit shall be galvanized only.

C. Wires for pulling into raceways for lighting and appliance branch circuitry shall be limited to "THWN".

D. Wires for pulling into raceways for feeders shall be limited to "THWN".

E. Plates for toggle switches and receptacles shall have gasketed snap shut covers suitable for wet locations while in use.

F. Final connections of flexible conduit shall be neoprene sheathed.

G. Apply one (1) layer of half looped plastic electric insulating tape over wire nuts used for joining the conductors of wires.

H. Enclosures, junction boxes, pull boxes, cabinets, cabinet trims, wiring troughs and the like, shall be fabricated of galvanized sheet metal, shall conform to the following:
1. They shall be constructed with continuously welded joints and seams.
2. Their edges and weld spots shall be factory treated with cold galvanizing compound.
3. Their connection to circuitry shall be by means of watertight hub connectors with sealing rings.

I. Enclosures for individually mounted switching and overcurrent devices shall be NEMA Class IV weatherproof construction.

J. The covers, doors and plates and trims used in conjunction with all enclosures, pull boxes, outlet boxes, junction boxes, cabinets and the like shall be equipped with gaskets.

K. Panels shall be equipped with doors without exception.

L. The following shall be interpreted as damp or wet locations within building confines:
1. Spaces where any designations indicating weatherproof (WP) or vapor proof appear on the drawings.
2. Below waterproofing in slabs applied directly on grade.
3. Spaces defined as wet or damp locations by Article 100 of the National Electric Code.
4. Parking garage.

3.5 LIMITING NOISE PRODUCED BY ELECTRICAL INSTALLATION

A. Perform the following work, in accordance with field instructions issued by the Architect to assure that minimal noise is produced by electrical installations due to equipment furnished as part of the electrical work.

B. Check and tighten the fastenings of sheet metal plates, covers, doors and trims used in the enclosures of electrical equipment.

C. Remove and replace any individual device containing one or more magnetic flux path metallic cores (e.g., discharge lamp ballast, transformer, reactor, dimmer, and solenoid) which is found to have a noise output exceeding that of other identical devices installed at the project.

3.6 SUPPORTS AND FASTENINGS

A. Support work in accordance with best industry standards, and Local Electric Code.

B. Include supporting frames or racks for equipment, intended for vertical surface mounting, which is required in a free standing position.

C. Supporting frames or racks shall be of standard angle, standard channel or specialty support system steel members. They shall be rigidly bolted or welded together and adequately braces to form a substantial structure. Racks shall be of ample size to assure a workmanlike arrangement of all equipment mounted on them.

D. No work intended for exposed installation shall be mounted directly on any building surface. In such locations, flat bar members or spaces shall be used to create a minimum of ¼" air space between the building surfaces and the work. Provide ¾" thick exterior grade plywood painted with two (2) coats of fire-retardant gray paint for mounting of panelboards.

E. Nothing (including outlet, pull and junction boxes and fittings) shall depend on electric conduits, raceways or cables for support.

F. Nothing shall rest on, or depend for support on, suspended ceiling media.

G. Support less than 2" trade size, vertically run, conduits at intervals no greater than 8'. Support such conduits, 2-1/2" trade size or larger, at intervals no greater than they story height, or 15', whichever is smaller.

H. Where they are not embedded in concrete, support less than 1" trade size, horizontally run, conduits at intervals no greater than 7'. Support such conduits, 1" trade size or larger, at intervals no greater than 10'.

I. Support all lighting fixtures directly from structural slab, deck or framing member.

J. Where fixtures and ceilings are such as to require fixture support from ceiling openings frames, include in the electric work the members necessary to tie back the ceiling opening frames to ceiling suspension members or slabs so as to provide actual support for the fixtures noted above.

K. As a minimum procedure, in suspended ceilings support smalls runs of circuitry (e.g., conduit not in excess of 1" trade size) from ceiling suspension members as defined above. Support larger runs of circuitry directly from structural slabs, decks or framing members.

L. Fasten electric work to building structure in accordance with the best industry practice.

M. Floor mounted equipment shall not be held in place solely by its own dead weight. Include floor anchor fastenings in all cases.

N. For items which are shown as being ceiling mounted at locations where fastenings to the building construction element above is not possible, provide suitably auxiliary channel or angle iron bridging hung to building structural elements.

O. As a minimum procedure, where weight applied to the attachment points is 100 lbs. or less, fasten to concrete and solid masonry with bolts and expansion shields.

P. As a minimum procedure, where weight applied to building attachment points exceed 100 lbs., but is 300 lbs. or less, conform to the following:
1. At field poured concrete slabs, utilize inserts with 20' minimum length slip-through steel rods, set transverse to reinforcing steel.

3.7 SPLICING AND TERMINATING WIRES AND CABLES

A. Maintain all splices and joints in removable cover boxes or cabinets where they may be easily inspected.

B. Locate each completed conductor splice or joint in the outlet box, junction box, or pull box containing it, so that it is accessible from the removal cover side of the box.

C. Join solid conductors No. 8 AWG and smaller by securely twisting them together and soldering, or by using insulated coiled steel spring "wire nut" type connectors. Exclude "wire nuts" employing non-expandable springs. Terminate conductors No. 8 AWG and smaller by means of a neat and fast holding application of the conductors directly to the binding screws or terminals of the equipment or devices to be connected.

D. Join, tap and terminate standard conductors No. 6 AWG and larger by means of solder sleeves, taps, and lugs with applied solder or by means of bolted saddle type or pressure indent type connectors, taps and lugs. Exclude connectors and lugs of the types which apply set screws directly to conductors. Where equipment or devices are equipped with set screw type terminals which are impossible to change, replace the factory supplied set screws with a type having a ball bearing tip. Apply pressure indent type connectors, taps and lugs utilizing tools manufactured specifically for the purpose and having features preventing their release until the full pressure has been exerted on the lug or connector.

E. Except where wire nuts are used, build up insulation over conductor joints to a value, equal both in thickness and dielectric strength, to that of the factory applied conductor insulation. Insulation of conductor taps and joints shall be by means of half-lapped layers of rubber tape, with an outer layer of friction tape; by means of half-lapped layers of approved plastic electric insulating tape; or by a means of split insulating casings manufactured specifically to insulate the particular connector and conductor, and fastened with stainless steel or non-metallic snaps or clips.

3.8 PULLING WIRES INTO CONDUITS AND RACEWAYS

A. Delay pulling wires or cables in until the project has progressed to a point when general construction procedures are not liable to injure wires and cables, and when moisture is excluded from raceways.

B. Utilize nylon snakes or metallic fish tapes with ball type heads to set up for pulling. In raceways 2" trade size and larger, utilize a pulling assembly ahead of wires consisting of a suitable brush followed by a 3-1/2" diameter ball mandrel.

C. Leave sufficient slack on all runs of wire and cable to permit the secure connection of devices and equipment.

D. Include circular wedge-type cable supports for wires and cables at the top of any vertical raceway longer than 20 feet. Also include additional supports spaced at intervals which are no greater than 10'. Supports shall be located in accessible pull boxes. Supports shall be of a non-deteriorating insulating material manufactured specifically for the purpose.

E. Pulling lubricants shall be used. They shall be products manufactured specifically for the purpose.

3.9 REQUIREMENTS FOR THE INSTALLATION OF JUNCTION BOXES, OUTLET BOXES AND PULL BOXES

A. Flush wall-mounted outlet boxes shall not be set back to back but shall be offset at least 12" horizontally regardless of any indication on the drawings.

B. Locate all boxes so that their removable covers are accessible without necessitating the removal of parts of permanent building structure, including piping, ductwork, and other permanent mechanical elements.

C. In conjunction with concealed circuitry, abide by one of the following instructions (as may be applicable to the conditions) in order to assure the aforementioned accessibility. (Not required for circuitry concealed by removable suspended ceiling tiles.)

D. For a small (outlet size) box on circuitry concealed in a partition or wall, locate box or fitting so that its removable cover side, (or the face of any applied raised cover) penetrates through to within 1/8" of the exposed surface of the building materials concealing the circuitry and apply a blank or device plate to suit the functional requirements.

E. For a large box on circuitry concealed in a partition, suspended ceiling, or wall, locate box totally hidden but with its removable cover directly behind an architectural access door or panel (included for the purpose, separate from the electric work) in the building construction which conceals the circuitry.

F. Include all required junction and pull boxes regardless of indications on the drawings (which, due to symbolic methods of notation, may omit to show some of them).

G. Unless noted below or otherwise specifically indicated, include a separate outlet box for each individual wiring device, lighting fixture and signal or communication system outlet component. Outlet boxes supplied attached to lighting fixtures shall not be used as replacements for the boxes specified herein.

H. Utilize an outlet box no smaller than 5" square by 2-1/2" deep.

I. Allow no fixture to be supplied from an outlet box in another room.

J. Multiple local switches indicated at a single location shall be gang-mounted in a single outlet box.

K. Install junction boxes, pull boxes and outlet boxes in conjunction with concealed circuitry.

L. Close up all unused circuitry openings in outlet boxes. Unused openings in cast boxes shall be closed with approved cast metal threaded plugs. Unused openings in sheet metal boxes shall be closed with sheet metal knock-out plugs.

M. Outlet boxes for switches shall be located at the strike side of doors. Indicate door swings are subject to field change. Outlet boxes shall be located on the basis of final door swing arrangements.

N. Boxes and plaster covers for duplex receptacles shall be arranged for vertical mounting of the receptacle.

O. Equip outlet boxes used for devices which are connected to wires of systems supplied by more than one set of voltage characteristics with barriers to separate the different systems.

P. Barriers in junction and pull boxes of outlet size shall be of the same metal as the box.

Q. Barriers in junction and pull boxes which are larger than outlet size shall be of the polyester resin fiberglass of adequate thickness for mechanical strength, but in no case less than 1/4" thick. Each barrier shall be mounted, without fastenings, between angle iron guides so that they may be readily removed.

3.10 LOCATING AND ROUTING OF CIRCUITRY

A. In general, all circuitry shall be run concealed except that it shall be run exposed where the following conditions occur:
1. Horizontally at the ceiling of permanently unfinished spaces which are not assigned to mechanical or electrical equipment.
2. Horizontally and vertically in mechanical equipment spaces.
3. Horizontally and vertically in electric equipment rooms.

B. Concealed circuitry shall be so located that building construction materials can be applied over its thickest elements without being subject to spalling or cracking.

C. All circuitry and raceways shall not be run within slabs. If field conditions requires raceways to be embedded in field-poured structural building construction concrete fill or slab shall conform to the following:
1. Where turned up or down into a wall or partition they shall, before entering same, be routed parallel for a long enough distance to assure that no relocation of the wall or partition will be necessary to conceal the required bend.
2. They shall be routed in such a manner as to coordinate with the structural requirements of the building.
3. They shall be routed in accordance with field instructions issued by the Architect where such instructions differ from specifications set forth herein.

D. Circuitry run exposed shall be routed parallel to building walls and column lines.

E. Circuitry shall be routed so as to prevent electric conductors from being subject to high ambient temperature. Minimum clearances from heated lines or surfaces shall be maintained as follows:
1. Crossing where uninsulated: 3".
2. Crossing where insulated: 1"
3. Running parallel where uninsulated: 36".
4. Running parallel where insulated: 6".

F. Circuitry shall not be run in elevator shafts, hoistways, and the like. Where outlets for trail cables, pit lights, run be level lights, and the like, are involved, only the "final connection" outlet boxes themselves shall be located within or open into, the confines of the shaft.

3.11 INSTALLING CIRCUITRY

A. The outside surface of circuitry, which is to be embedded in cinder concrete, shall be coated with asphaltum paint.

B. In runs of conduit or raceway including flexible limit the number of bends between cable access points to a total which does not exceed the maximum specified for the particular system. Where no such maximum is specified, limit the number to four (4) right angle bends or the equivalent thereof.

C. In each conduit or raceway assigned for the future pulling in of wires, include a nylon drag cord. In raceways 2" trade size and larger, the cord shall be pulled in utilizing a suitable brush, followed by an 85% diameter ball mandrel ahead of the cord in the pulling assembly. In the event that obstructions are encountered, which will not permit the drag cord to be installed, the blocked section of raceway shall be replaced and any cutting and patching of the structure involved in such replacement shall be included as part of the electric work.

D. Circuitry shall be arranged such that conductors of one feeder or circuitry carrying "going" current are not separated from conductors of the same feeder or circuitry carrying "return" current by any ferrous or other metal. Where not within raceways, all "going" and "return" current conductors of one feeder or circuit shall be laced together so as to minimize induction heating of adjacent metal components.

E. Sleeves used where circuitry is to penetrate waterproof slabs, decks and walls, shall be of a type selected to suit the water condition encountered in the field.

END OF SECTION

castellone architecture
792 great road
lincoln, ri 02865
401-465-9861

ENGINEERING DESIGN SERVICES INCORPORATED
141 Mineral Spring Avenue, North Providence, RI 02904
Tel (401) 765-7649 Fax (401) 765-2994

DRAWN BY: ARM
JUNE 12, 2026
REVISIONS:

DENTAL CLINIC 2ND FLOOR ALTERATIONS

TRI-COUNTY COMMUNITY ACTION AGENCY
1126 HARTFORD AVENUE
JOHNSTON, RI 02919

ELECTRICAL SPECIFICATIONS

E3-3

BID SET

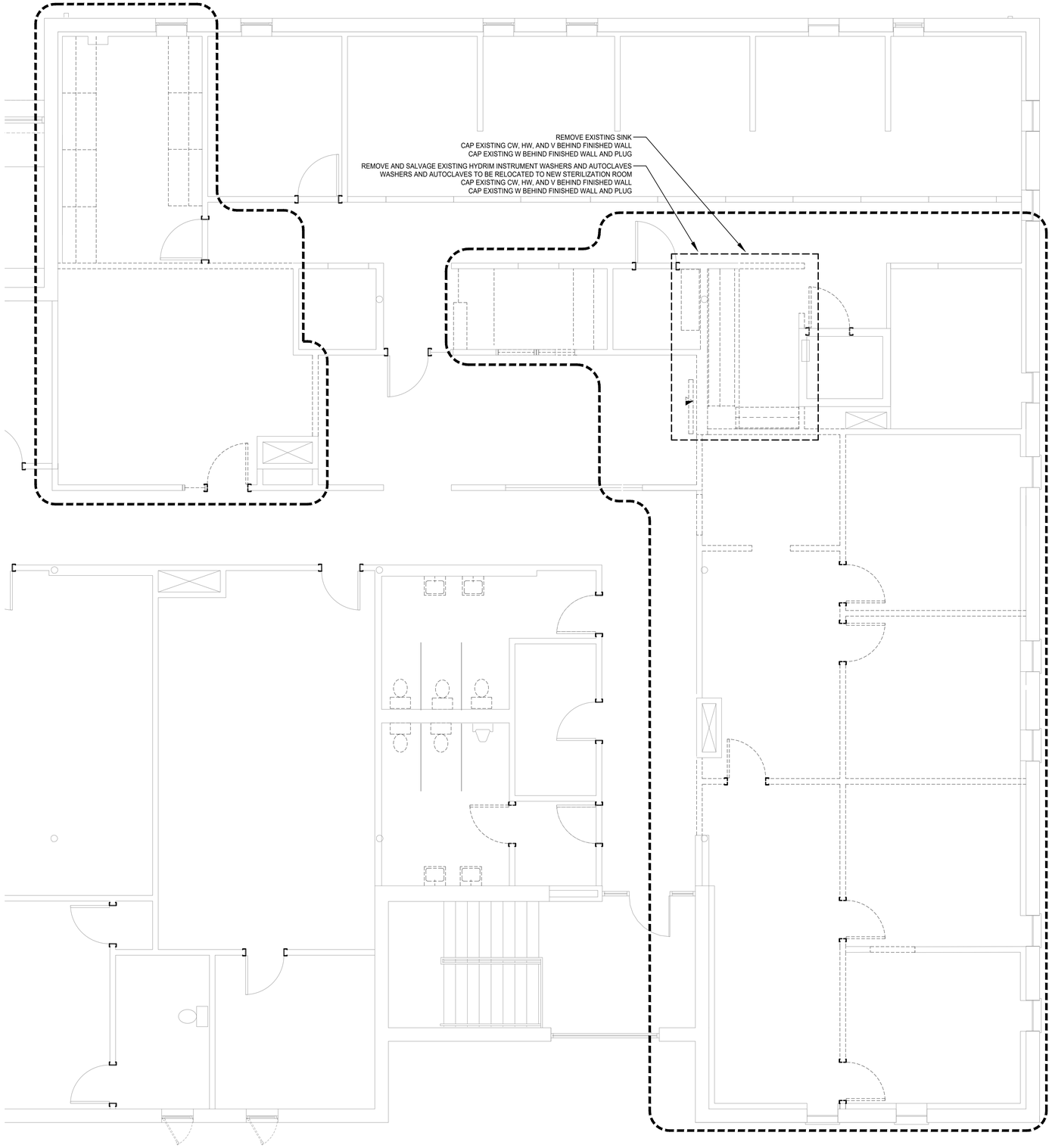

NORTH

PLUMBING - SECOND FLOOR DEMOLITION PLAN

1/4" = 1'-0"

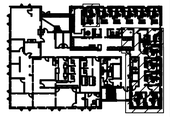

KEY PLAN
SECOND FLOOR

NORTH

castellone architecture
792 great road
lincoln, ri 02865
401-465-9861

ENGINEERING DESIGN SERVICES INCORPORATED
141 Mineral Spring Avenue, North Providence, RI 02904
Tel (401) 765-7649 Fax (401) 765-2994

DRAWN BY: MA
JUNE 12, 2026
REVISIONS:

DENTAL CLINIC 2ND FLOOR ALTERATIONS

TRI-COUNTY COMMUNITY ACTION AGENCY
1126 HARTFORD AVENUE
JOHNSTON, RI 02919

PLUMBING
SECOND FLOOR
DEMOLITION PLAN

PD1-1

BID SET

PLUMBING GENERAL NOTES

1. BIDDERS SHALL UTILIZE A COMPLETE SET OF PLUMBING BIDDING DOCUMENTS IN PREPARING OF BID INCLUDING DRAWINGS AND SPECIFICATIONS. THE ENGINEER ASSUMES NO RESPONSIBILITY FOR ERRORS OR MISINTERPRETATIONS RESULTING FROM THE USE OF INCOMPLETE SETS OF PLUMBING BIDDING DOCUMENTS.

   THESE PLUMBING BIDDING DOCUMENTS SHALL INCLUDE:

   SPECIFICATION
   22.00.00 PLUMBING SPECIFICATION

   DRAWINGS
   P0-1 PLUMBING LEGEND AND GENERAL NOTES
   PD1-1 PLUMBING SECOND FLOOR DEMOLITION PLAN
   P1-1 PLUMBING SECOND FLOOR PLAN
   P1-2 PLUMBING FIRST FLOOR PLAN
   P1-3 PLUMBING SECOND FLOOR DENTAL VACUUM, AIR, AND WATER PLAN
   P2-1 PLUMBING SPECIFICATIONS SHEET 1 OF 2
   P2-2 PLUMBING SPECIFICATIONS SHEET 2 OF 2

2. THE WORK COVERED CONSISTS OF FURNISHING ALL LABOR AND MATERIALS NECESSARY TO INSTALL, COMPLETE AND READY FOR CONTINUOUS OPERATION, THE PLUMBING SYSTEMS, APPARATUS AND EQUIPMENT FOR THIS PROJECT.

3. ALL EQUIPMENT AND MATERIALS FURNISHED UNDER THE PLUMBING SUB-CONTRACT, LABOR AND TESTING PERFORMED HEREIN SHALL BE IN COMPLETE ACCORDANCE WITH THE STATE BUILDING CODE, LOCAL FUEL GAS AND PLUMBING CODES, ALL LOCAL CODES AND REGULATIONS, NATIONAL FIRE PROTECTION ASSOCIATION, INSURANCE REGULATIONS AND REQUIREMENTS GOVERNING SUCH WORK.

4. ANY AND ALL PERMITS REQUIRED FOR INSTALLATION OF ANY MATERIAL SHALL BE OBTAINED AS PART OF THE WORK OF THE SPECIFICATION INCLUDING ALL FEES OR EXPENSES INCURRED.

5. WHERE WATER PIPING IS SHOWN DROPPING INTO PLUMBING CHASES WITH SIZES NOTED, THAT SIZE SHALL BE CARRIED FULL LENGTH THROUGH THE CHASE.

6. SHOCK ABSORBERS SHALL BE EXTENDED VERTICALLY WITHIN CHASE TO ABOVE FINISHED CEILING. SHUTOFF VALVES SHALL BE INSTALLED DIRECTLY BEFORE THE DEVICE TO ENABLE THE REPLACEMENT WITHOUT HAVING TO SHUT DOWN THE ENTIRE BRANCH OR MAIN.

7. MISCELLANEOUS DISCREPANCIES OR OMISSIONS WHICH MIGHT APPEAR ON THE PLANS OR SPECIFICATIONS WILL NOT RELIEVE THE PLUMBING SUB-CONTRACTOR OF CODE COMPLIANCE.

PLUMBING TRAP SEAL MAINTENANCE NOTES

1. FLOOR DRAINS SHALL BE FITTED WITH A BARRIER TYPE FLOOR DRAIN TRAP SEAL PROTECTION DEVICE.

PLUMBING HOT WATER PIPING SYSTEM DISTRIBUTION NOTES

1. HOT WATER SUPPLY AND CIRCULATION PIPING SHALL BE PROVIDED WITH INSULATION IN ITS ENTIRETY IN ACCORDANCE WITH C404.4 SERVICE WATER HEATING SYSTEM PIPING INSULATION.
   PIPING INSULATION THICKNESS SHALL BE IN ACCORDANCE WITH TABLE C404.4.1 MINIMUM PIPING INSULATION THICKNESS FOR SERVICE WATER HEATING SYSTEM WITH A FLUID OPERATING TEMPERATURE RANGE AND USAGE OF 105°F TO 140°F.
   PIPING 1 1/4" AND SMALLER SHALL BE PROVIDED WITH 1" INSULATION THICKNESS.

   INSULATION SHALL TERMINATE AT EACH FIXTURE SUPPLY TO EACH PLUMBING FIXTURE OR APPLIANCE.

2. HOT WATER BRANCH PIPING SHALL BE A CONTINUOUS LOOP SYSTEM WITH A MAXIMUM ALLOWABLE PIPING LENGTH FROM THE NEAREST SOUSE OF HEATED HOT WATER TO THE TERMINATION OF THE FIXTURE SUPPLY PIPE IN ACCORDANCE WITH C404.5.1 AND TABLE C404.5.1.
   WHERE THE PIPING CONTAINS MORE THAN ONE SIZE OF PIPE, THE LARGEST SIZE OF PIPE WITHIN THE PIPING SHALL BE USED FOR DETERMINING THE MAXIMUM ALLOWABLE LENGTH OF PIPING IN TABLE C404.5.1.

   MAXIMUM PIPING LENGTHS SERVING PUBLIC LAVATORY FAUCETS
   1/2" PIPE = 2'-0"
   3/4" PIPE = 6"

   MAXIMUM PIPING LENGTHS SERVING OTHER FIXTURES AND APPLIANCES
   1/2" PIPE = 43'-0"
   3/4" PIPE = 21'-0"

PLUMBING ADDITIONAL PIPING INSULATION NOTES:

1. ALL COLD WATER PIPE, HOT WATER PIPE AND HOT WATER CIRCULATION PIPE SHALL BE INSULATED IN ITS ENTIRETY.

2. COLD WATER PIPE 1 1/4" AND SMALLER SHALL BE 1/2" THICKNESS.
   COLD WATER PIPE 1 1/2" AND LARGER SHALL BE 1" THICKNESS.
   HOT WATER PIPE AND HOT WATER CIRCULATION PIPE 1 1/4" AND SMALLER SHALL BE 1" THICKNESS.

3. BRANCH COLD WATER PIPE SERVING ONE PLUMBING FIXTURE OR GROUP OF FIXTURES IN ONE ROOM SHALL BE 1/2" THICKNESS.

4. BRANCH HOT WATER PIPE SERVING ONE PLUMBING FIXTURE OR GROUP OF FIXTURES IN ONE ROOM SHALL BE 1" THICKNESS.

5. INSULATION SHALL TERMINATE AT EACH FIXTURE SUPPLY TO EACH PLUMBING FIXTURE OR APPLIANCE.

6. ADA COMPLIANT PLUMBING FIXTURES WITH EXPOSED PIPE SHALL BE INSULATED WITH A PROTECTIVE INSULATED JACKET.

PLUMBING EXISTING PIPING NOTES

1. EXISTING AND NEW PIPING SHALL BE REVIEWED WITH THE BUILDING OWNERS REPRESENTATIVE PRIOR TO ANY INSTALLATION.

PLUMBING DEMOLITION NOTES

1. DISCONNECT AND DISMANTLE EXISTING PLUMBING SYSTEMS AND EQUIPMENT TO BE DEMOLISHED AND LEAVE DEBRIS AND DISCONNECTED EQUIPMENT IN DESIGNATED AREA FOR REMOVAL UNDER SECTION 02070 - SELECTIVE DEMOLITION.

2. REMOVE EXISTING PLUMBING STACKS, MAINS AND BRANCHES WHEN SERVING FIXTURES TO BE REMOVED. REMOVE PIPING BACK TO NEXT ACTIVE MAIN AND PROVIDE CAP OR PLUG TO SUIT SYSTEM. OBTAIN EXISTING RECORD DRAWINGS FROM OWNER IF AVAILABLE. MAINTAIN EXISTING PLUMBING RISERS AND STACKS SERVING FIXTURES TO REMAIN.

3. AFTER WALLS AND CEILINGS ARE REMOVED AND PIPING IS EXPOSED, VERIFY PIPING SERVES ONLY PLUMBING FIXTURES INDICATED FOR DEMOLITION BEFORE SHUTDOWN FOR DISCONNECTION. IDENTIFY EXISTING PIPING WHICH SERVES FIXTURES TO REMAIN. PROMPTLY NOTIFY ARCHITECT OF ACTIVE PIPING TO BE MAINTAINED WHEN LOCATED IN PARTITIONS TO BE DEMOLISHED.

4. REMOVE EXISTING STACKS AND RISERS LOCATED IN EXISTING PARTITIONS TO BE DEMOLISHED AND PROVIDE NEW OFFSET AT CEILING AND DROP THROUGH FLOOR AND RECONNECT TO EXISTING SERVICES AT FLOORS BELOW.

PLUMBING LEGEND

PIPING

SYMBOL	ABBREVIATION	DESCRIPTION
		NEW WORK (ABOVE GROUND) (PERTAINS TO ALL SYSTEM)
	ETR	EXISTING WORK TO REMAIN (ABOVE GROUND)(PERTAINS TO ALL SYSTEM)
	RE	REMOVE EXISTING (ABOVE GROUND) (PERTAINS TO ALL SYSTEM)
		NEW WORK (BURIED BELOW GROUND) (PERTAINS TO ALL SYSTEM)
	ETR	EXISTING WORK TO REMAIN (BURIED BELOW GROUND) (PERTAINS TO ALL SYSTEM)
	RE	REMOVE EXISTING (BURIED BELOW GROUND) (PERTAINS TO ALL SYSTEM)
	CW	COLD WATER
FCW	FCW	FILTERED COLD WATER BURIED BELOW
	HW	HOT WATER 120°F
	HWC	HOT WATER CIRCULATION
	S or W	SANITARY OR WASTE
S	S or W	SANITARY OR WASTE INSIDE FIRST FLOOR CEILING
	V	VENT
VAC	VAC	VACUUM
MED	MED	MED COMPRESSED AIR

VALVES

SYMBOL	ABBREVIATION	DESCRIPTION
	CV	CHECK VALVE
	DV-A	DRAIN VALVE TYPE WITH HOSE THREADS
	HB-A	HOSE BIBB TYPE WITH HOSE THREADS
		HOT WATER CIRCULATION FLOW SPLITTER
		SHUTOFF VALVE
		SHUTOFF VALVE (EXISTING)

GENERAL

SYMBOL	ABBREVIATION	DESCRIPTION
	AAV	AIR ADMITTANCE VALVE
	CO	CLEANOUT
	CTE	CONNECT TO EXISTING
	FD-A	DRAIN (FLOOR DRAIN & TYPE)
	DN	DROP (DOES NOT PENETRATE LEVEL BELOW)
		DOWN (PENETRATES LEVEL BELOW)
		INDICATES DIRECTION OF FLOW
		INDICATES DIRECTION OF SLOPE DOWN
	INV	INTERIOR BOTTOM ELEVATION OF PIPE
1		KEY DESIGNATION
		RISE (DOES NOT PENETRATE LEVEL ABOVE)
S=.01	S=.01	SLOPE = 1/8" PER FOOT - 1%
S=.02	S=.02	SLOPE = 1/4" PER FOOT - 2%
	UP	UP (PENETRATES LEVEL ABOVE)
	W & T	WASTE & TRAP

castellone architecture
792 great road
lincoln, ri 02865
401-465-9861

CDS ENGINEERING DESIGN SERVICES INCORPORATED
141 Dyer Street, Providence, RI 02903
Tel (401) 765-7439 Fax (401) 765-2994

DRAWN BY: MA
JUNE 12, 2026
REVISIONS:

DENTAL CLINIC 2ND FLOOR ALTERATIONS

TRI-COUNTY COMMUNITY ACTION AGENCY
1126 HARTFORD AVENUE
JOHNSTON, RI 02919

PLUMBING LEGEND & GENERAL NOTES

P0-1

BID SET

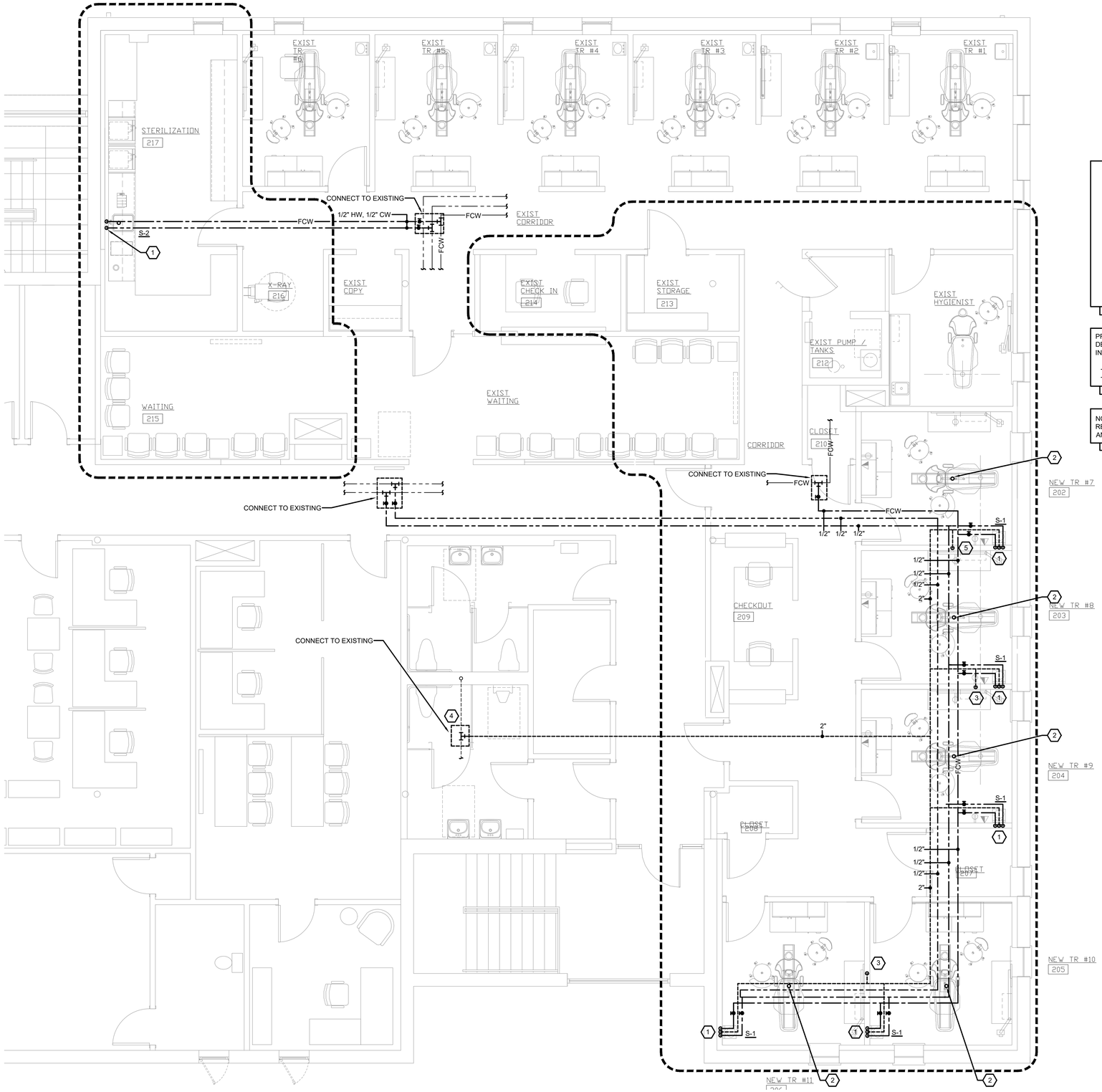

NORTH
PLUMBING - SECOND FLOOR PLAN
1/4" = 1'-0"

KEY NOTES

1. 1/2" CW DROP (SA-A)
   2" W DN, V UP
   1/2" HW DROP (SA-A)
2. 1-1/2" W DN
3. 2" V DROP
4. CONNECT NEW 2" VENT PIPE TO EXISTING CONTRACTOR TO VERIFY LOCATION AND CONNECTION IN FIELD
5. 2" V DROP

PROVIDE PLUMBING CONNECTIONS FOR THE FOLLOWING DENTAL EQUIPMENT AS APPLICABLE. EQUIPMENT MAY INCLUDE, BUT NOT LIMITED TO THE FOLLOWING:

- HYDRIM WASHER
- AUTOCLAVE

NOTE: CONTRACTOR TO VERIFY PLUMBING REQUIREMENTS AND ROUGH-IN LOCATIONS WITH OWNER AND VENDOR PRIOR TO CONSTRUCTION.

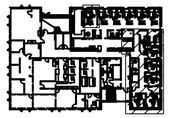

NORTH
KEY PLAN
SECOND FLOOR

castellone architecture
792 great road
lincoln, ri 02865
401-465-9861

CDS ENGINEERING DESIGN SERVICES INCORPORATED
141 Dyer Street, Providence, RI 02903
Tel (401) 765-7649 Fax (401) 765-2994

DRAWN BY: MA
JUNE 12, 2026
REVISIONS:

DENTAL CLINIC 2ND FLOOR ALTERATIONS

TRI-COUNTY COMMUNITY ACTION AGENCY
1126 HARTFORD AVENUE
JOHNSTON, RI 02919

PLUMBING
SECOND FLOOR
PLAN

P1-1

BID SET

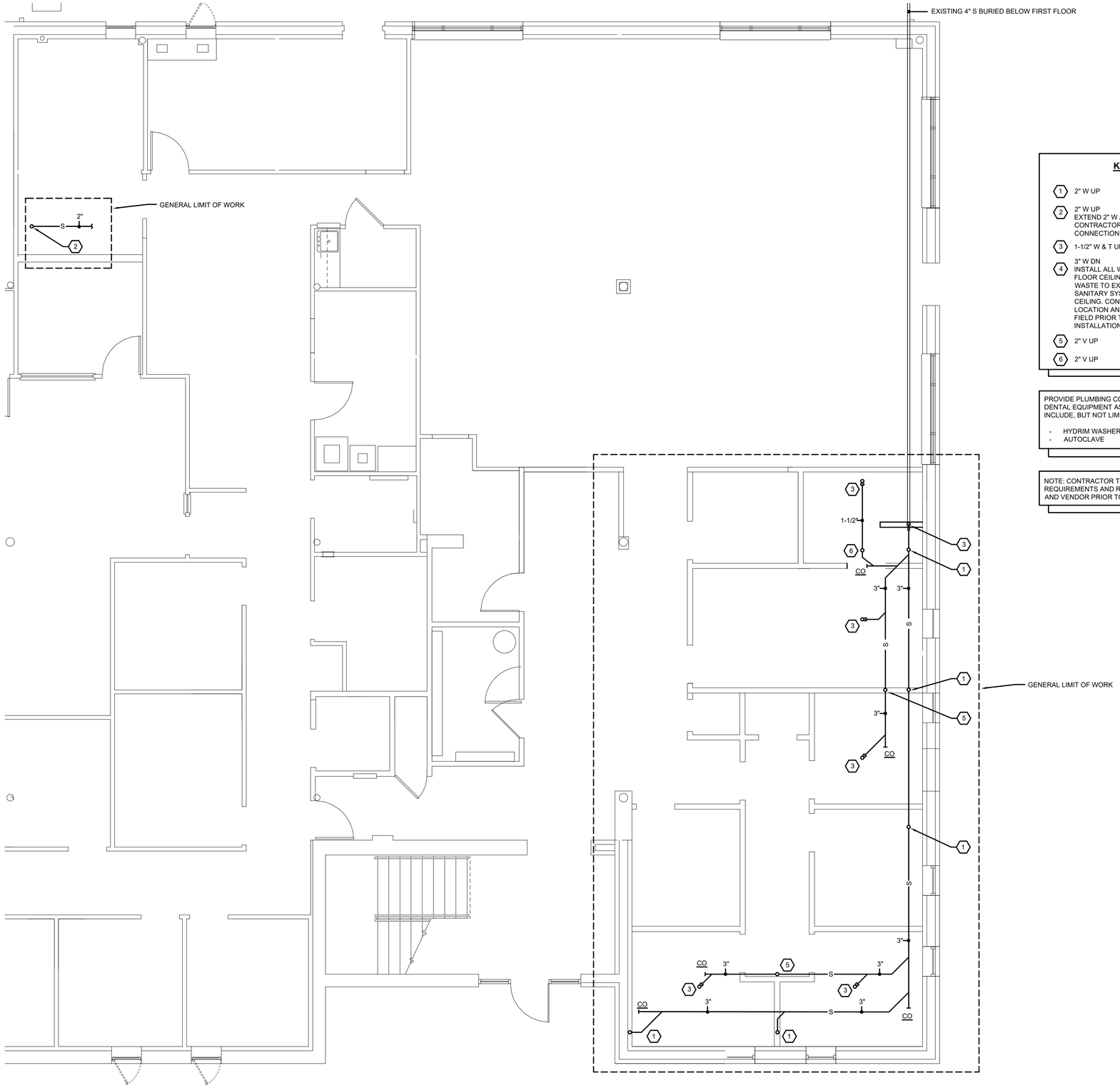

NORTH
PLUMBING - FIRST FLOOR CEILING PLAN
1/4" = 1'-0"

KEY NOTES

1. 2" W UP
2. 2" W UP
   EXTEND 2" W AND CONNECT TO EXISTING 3" W CONTRACTOR TO VERIFY LOCATION AND CONNECTION IN FIELD
3. 1-1/2" W & T UP
4. 3" W DN
   INSTALL ALL WASTE PIPING ABOVE FIRST FLOOR CEILING AND CONNECT NEW 3" WASTE TO EXISTING 4" BASE BUILDING SANITARY SYSTEM ABOVE FIRST FLOOR CEILING. CONTRACTOR TO VERIFY EXACT LOCATION AND INVERT OF EXISTING MAIN IN FIELD PRIOR TO START OF NEW PIPING INSTALLATION.
5. 2" V UP
6. 2" V UP

PROVIDE PLUMBING CONNECTIONS FOR THE FOLLOWING DENTAL EQUIPMENT AS APPLICABLE. EQUIPMENT MAY INCLUDE, BUT NOT LIMITED TO THE FOLLOWING:

- HYDRIM WASHER
- AUTOCLAVE

NOTE: CONTRACTOR TO VERIFY PLUMBING REQUIREMENTS AND ROUGH-IN LOCATIONS WITH OWNER AND VENDOR PRIOR TO CONSTRUCTION.

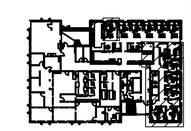

NORTH
KEY PLAN
SECOND FLOOR

castellone architecture
792 great road
lincoln, ri 02865
401-465-9861

CDS ENGINEERING DESIGN SERVICES INCORPORATED
141 Dyer Street, Providence, RI 02903
Tel (401) 765-7439 Fax (401) 765-2994

DRAWN BY: MA
JUNE 12, 2026
REVISIONS:

DENTAL CLINIC 2ND FLOOR ALTERATIONS

TRI-COUNTY COMMUNITY ACTION AGENCY
1126 HARTFORD AVENUE
JOHNSTON, RI 02919

PLUMBING
FIRST FLOOR
CEILING PLAN

P1-2

BID SET

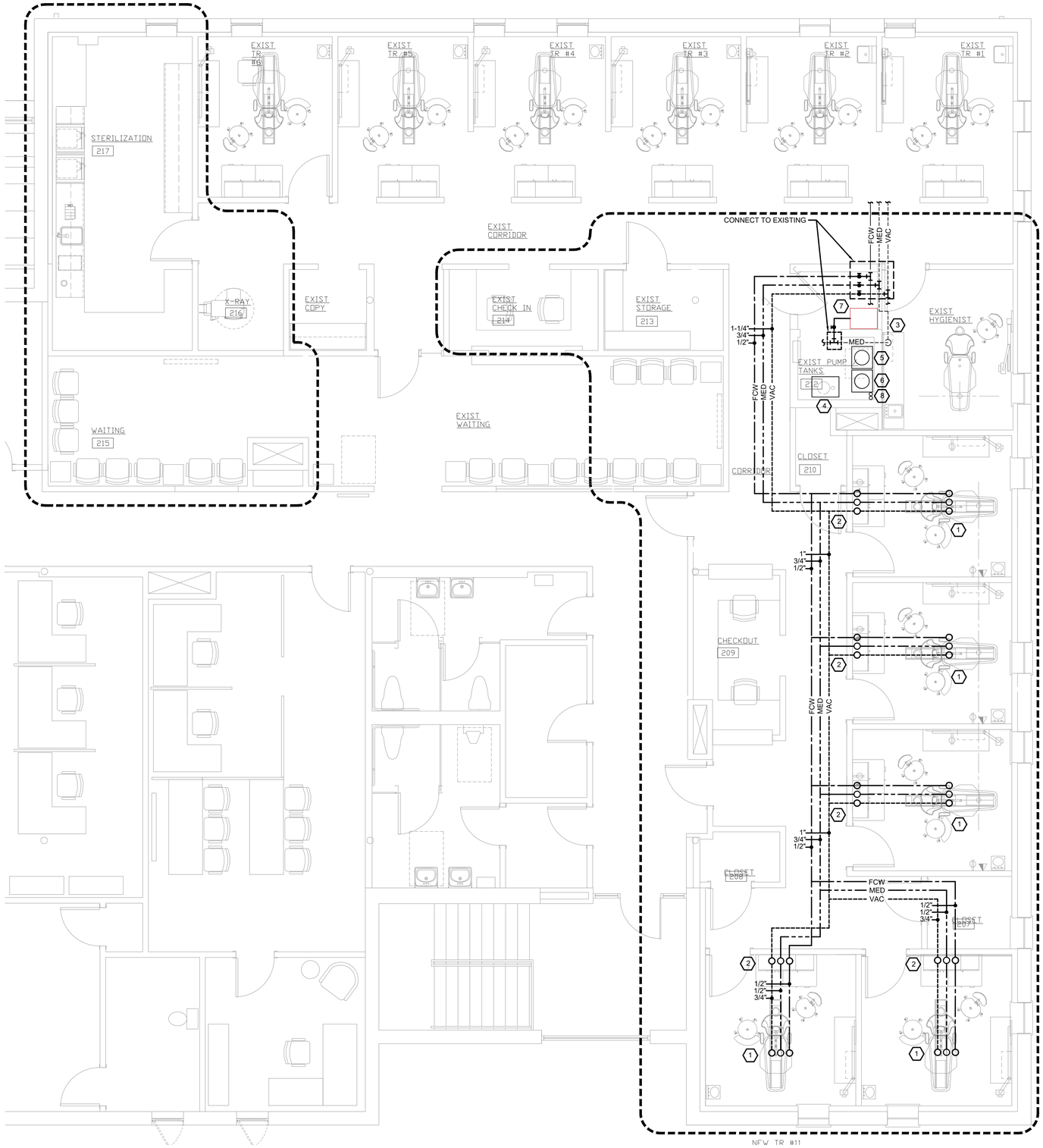

NORTH PLUMBING - SECOND FLOOR DENTAL VACUUM, AIR, AND WATER PLAN
1/4" = 1'-0"

KEY NOTES

1. UTILITY CENTER - PROVIDE 3/4" VACUUM, 1/2" MED COMPRESSED AIR, AND 1/2" FILTERED WATER TO UTILITY CENTER FED FROM BELOW. PROVIDE BACKFLOW PROTECTION AS REQUIRED. COORDINATE EXACT LOCATION OF PIPING THRU DECK w/ DENTAL CHAIR LOCATIONS. PROVIDE 2-HR STOPPING SEALANT AT ALL FLOOR PENETRATIONS (TYP).
2. HYGIENIST CABINET - PROVIDE 3/4" VACUUM, 1/2" MED COMPRESSED AIR, AND 1/2" FILTERED WATER TO HYGIENIST CABINET FED FROM BELOW. PROVIDE 2-HR STOPPING SEALANT AT ALL FLOOR PENETRATIONS (TYP).
3. 3/4" MED COMPRESSED AIR DOWN THROUGH FLOOR TO FIRST FLOOR CEILING
4. TWO (2) EXISTING TO REMAIN MEDICAL GRADE AIR COMPRESSOR
   (MIDMARK POWER AIR P22 - SERVES 3 PATIENTS)
   (MIDMARK POWER AIR P32 - SERVES 5 PATIENTS)
5. ONE (1) EXISTING TO REMAIN MEDICAL GRADE VACUUM
   (MIDMARK POWER VAC G7 - SERVES 10 PATIENTS)
6. ONE (1) EXISTING TO REMAIN MEDICAL GRADE VACUUM
   (MIDMARK POWER VAC G3 - SERVES 5 PATIENTS)
7. NEW MEDICAL AIR COMPRESSOR
   (MIDMARK POWER AIR P32 - SERVES 5 PATIENTS)
   (REQUIRED TO SERVE 5 NEW EXAM ROOMS)
   (EXTEND 1" AIR INTAKE TO EXISTING AS REQUIRED)
   (CONTRACTOR TO VERIFY CONNECTION IN FIELD)
8. EXISTING TO REMAIN 2" COMPRESSED AIR INTAKE UP
   EXISTING TO REMAIN 2" VACUUM EXHAUST UP

VACUUM, MED COMPRESSED AIR, AND FILTERED WATER PIPING RUNS THROUGHOUT FIRST FLOOR CEILING. UTILITY CENTERS AND HYGIENIST CABINETS ON SECOND FLOOR ARE ALL FED FROM BELOW.

MEDICAL PIPE NOTES

VACUUM PIPING TO BE TYPE M COPPER OR SCHEDULE 40 PVC. MAIN TRUNK LINE TO MAINTAIN A MINIMUM SLOPE OF 1/4" PER 10' TOWARDS PUMP. USE "DRAIN, WASTE, AND VENT" (DWV), OR 45 DEGREE ELBOWS. ALWAYS STAGGER BRANCH LINES FROM MAIN TRUNK. DO NOT USE 4-WAY CROSS FITTINGS.

COMPRESSED AIR PIPING TO BE TYPE M COPPER. MAIN TRUNK LINE TO MAINTAIN A MINIMUM SLOPE OF 1/4" PER 10' TOWARDS SOURCE COMPRESSOR.

PROVIDE PLUMBING CONNECTIONS FOR THE FOLLOWING DENTAL EQUIPMENT AS APPLICABLE. EQUIPMENT MAY INCLUDE, BUT NOT LIMITED TO THE FOLLOWING:

- HYDRIM WASHER
- AUTOCLAVE

NOTE: CONTRACTOR TO VERIFY PLUMBING REQUIREMENTS AND ROUGH-IN LOCATIONS WITH OWNER AND VENDOR PRIOR TO CONSTRUCTION.

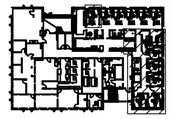

NORTH KEY PLAN SECOND FLOOR

castellone architecture
792 great road
lincoln, ri 02865
401-465-9861

CDS ENGINEERING DESIGN SERVICES INCORPORATED
141 Dyer Street, Providence, RI 02903
Tel (401) 765-7649 Fax (401) 765-2994

DRAWN BY: MA
JUNE 12, 2026
REVISIONS:

DENTAL CLINIC 2ND FLOOR ALTERATIONS

TRI-COUNTY COMMUNITY ACTION AGENCY
1126 HARTFORD AVENUE
JOHNSTON, RI 02919

PLUMBING SECOND FLOOR DENTAL VACUUM, AIR, AND WATER PLAN

P1-3

BID SET

SECTION 22.00.00 - PLUMBING

PART I – GENERAL

1.1 RELATED DOCUMENTS

A. Drawings and General Provisions of Contract, including General and Supplementary Conditions and Division-1 Specification Sections, apply to work of this section.

B. Bidders shall utilize a complete set of Bidding Documents in preparing of Bid including Drawings and Specifications. The Engineer assumes no responsibility for errors or misinterpretations resulting from the use of incomplete sets of Bidding Documents.

C. Coordinate work with that of all other trades affecting or affected by work of this Section. Cooperate with such trades to assure the steady progress of all work under the Contract.

1.2 DEFINITIONS

A. As used in the drawings and specifications for plumbing work, certain non-technical words shall be understood to have specific meanings as follows, regardless of indications to the contrary in the General Conditions of other documents governing the plumbing work.

B. As used in this section, "provide" means "furnish and install", and "POS" means "Provided under Other Sections".

C. "Approved Equal" means any equipment or material, which is approved by the engineer, and equal in quality, durability, appearance, strength, design and performance to the equipment or material originally specified.

D. "Alternate" means an amount proposed by bidders and stated on the Bid Form for certain work defined in the Bidding Requirements that may be added to or deducted from the base bid amount if Owner decides to accept a corresponding change either in the amount of construction to be completed or in the products, materials, equipment, systems, or installation methods described in the Contract Documents.

E. The cost or credit for each alternate is the net addition to or deduction from the Contract Sum to incorporate alternate into the Work. No other adjustments are made to the Contract Sum.

F. "Concealed" means hidden in chases, furred spaces, walls, above ceilings or enclosed in construction.

G. "Contractor and/or Subcontractor" specifically means, the Plumbing Subcontractor working under this Section of the Specification.

H. "Exposed" means visible, in sight, or not installed "concealed" as defined above.

I. "Furnish" or "Provide" means:

1. Purchase and deliver to the project site complete with every necessary appurtenance and support, all as part of the plumbing work. Purchasing shall include payment of all sales taxes and other surcharges as may be required to assure that purchased item(s) are free of all liens, claims, or encumbrances.

2. To supply, erect, install and connect in complete readiness for operation, the particular work referred to, unless otherwise specified.

J. "Install" means: Unload at the delivery point at the site and perform every operation necessary to establish secure mounting and correct operation at the proper location in the project, all as part of the plumbing work.

K. "May" means: A permissive term.

L. "New" means: Manufactured within the past two (2) years and never before used.

M. "Piping" means all piping including fittings, joints, hangers, supports and valves.

N. "Provide" means: "Furnish" and "Install".

O. "Shall" means: A mandatory term.

P. "Underground or Below Slab" means piping that is buried exterior to or within the building.

Q. Except where modified by a specific notation to the contrary, it shall be understood that the indication and/or description of any plumbing item in the drawings or specifications for plumbing work carries with it the instruction to furnish, install and connect the item as part of the plumbing work, regardless of whether or not this instruction is explicitly stated.

R. It shall be understood that the specifications and drawings for plumbing work are complimentary and are to be taken together for a complete interpretation of the plumbing work except that indications on the drawings, which refer to an individual element of work, take precedence over the specifications where they conflict with same.

1.3 SUMMARY

A. This section addresses materials and methods common to more than one Subcontractor. Refer to the drawings to determine the extent of work required of each individual trade.

1.4 DESCRIPTION OF WORK

A. The work described herein shall be interpreted as work to be done by the Plumbing Subcontractor. Work to be performed by other trades will be specifically referenced to a particular Contractor or Subcontractor.

B. The work under this section shall consist of furnishing all labor, materials, equipment, supervision, transportation, construction, facilities, devices and incidentals necessary to provide complete plumbing systems as hereinafter described and as indicated on the drawings, including, but not limited to the following:

1. Domestic cold water system.
2. Domestic hot water supply and recirculation systems.
3. Waste and vent system.
4. Filtered cold water system.
5. Medical vacuum system.
6. Medical compressed air system.
7. Coordination drawings.
8. Pipe insulation.
9. As of January 4, 2014; all products associated with any plumbing system utilized to convey potable drinking water shall comply with the Reduction of Lead in Drinking Water Act.
10. Electrical power 24 volt copper power wiring.

1.5 RELATED WORK IN OTHER SECTIONS

A. The following work is not included as work in this Section and is to be performed under other Sections:

1. Heating, Ventilating and Air Conditioning
2. Electrical power 120 volt and above
3. Utilities Beyond **5'-0"** from the Building
4. Excavation and Backfilling
5. Foundations and Trenching
6. Cast in Place Concrete
7. Temporary Light and Power
8. Temporary Water, Heat, Fire Protection, and Toilet Facilities
9. Concrete Bases for Equipment
10. Installation of Access Panels
11. Flashing and Caulking
12. All Cutting and Patching
13. Painting
14. Filtered water system. This plumbing sub-contractor shall make special provisions for contractually engaging the services of Atlas Water Systems to provide this system in its entirety

1.6 CODES, ORDINANCES, AND PERMITS

A. All materials and workmanship shall comply with the latest editions of all applicable Codes, Local and State Ordinances, Industry Standards, and Regulations.

B. Where the contract documents indicate more stringent requirements than the following codes and ordinances, the contract documents shall take precedence.

C. In the event of a conflict with Codes, the most stringent requirements shall apply.

D. The Plumbing Subcontractor shall notify the Architect/Engineer of any discrepancies between the Contract Documents and applicable Codes, Standards, etc.

E. File all documents, pay all fees and secure all permits, inspections and approvals necessary for the work of this section.

F. Include in the work, without extra cost to the Owner, any labor, materials, services, apparatus, drawings, in addition to contract drawings and documents in order to comply with all applicable local ordinances and regulations, whether or not shown on drawings and/or specified.

G. The following Codes, Standards and References shall be utilized as applicable:

1. 2025 RISBC-1 Rhode Island Building Code
   Incorporates 2021 International Building Code with Amendments
2. 2025 RISBC-3 Rhode Island Plumbing Code
   Incorporates 2021 International Plumbing Code with Amendments
3. 2025 RISBC-8 Rhode Island Energy Conservation Code
   Incorporated 2024 International Energy Conservation Code
4. 2025 RISBC-19 Rhode Island Fuel Gas Code
   Incorporates 2021 International Fuel Gas Code with Amendments
5. 2017 International Code Council A117.1 Accessible and Usable Buildings and Facilities
6. 2020 NFPA 58 Liquefied Petroleum Gas Code
7. 2021 NFPA 99 Health Care Facilities Code
8. 2018 Rhode Island Fire Safety Code
9. 2018 Rhode Island Fire Safety Code
9. Rules and Regulations of the Providence Water Supply Board
10. Local Ordinances, Board of Health requirements and Regulations.
11. American Gas Association (AGA).
12. American National Standards Institute (ANSI).
13. American Society of Heating, Refrigerating and Air Conditioning Engineers (ASHRAE).
14. American Society of Mechanical Engineers (ASME).
15. American Society of Testing Materials (ASTM).
16. American Welding Society (AWS).
17. Cast Iron Soil Pipe Institute (CISPI)
18. Commercial Standards, U.S. Department of Commerce (CS).
19. Department of Environmental Protection (DEP).
20. Environmental Protection Agency (EPA).
21. Factory Mutual (FM).
22. Industrial Risk Insurers (IRI).
23. Insurance Services Organization (ISO).
24. Manufacturers Standardization Society of the Valve and Fittings Industry (MSS).
25. National Electric Code (NEC).
26. National Electrical Manufacturers Association (NEMA).
27. National Fire Protection Association (NFPA).
28. Occupational Safety and Health Administration (OSHA)
29. Owner's Insurance Company Requirements.
30. State Department of Public Safety.
31. Underwriters' Laboratories, Inc. (UL).

1.7 CONTRACT DRAWINGS AND SPECIFICATIONS

A. The Contract Drawings are generally diagrammatic and convey the Scope of Work and General Arrangement of apparatus and equipment. The locations of all items shown on the drawings or called for in the specifications that are not definitely fixed by dimensions are approximate only. The exact locations necessary to secure the best conditions and results must be determined at the project and shall have the approval of the Architect and Engineer before being installed. The Subcontractor shall follow drawings in laying out work and shall check drawings of the other trades to verify spaces in which work will be installed. Maintain maximum headroom and space conditions at all points. If directed by the General Contractor, Engineer and/or Architect, the Subcontractor shall, without extra charge, make reasonable modifications in the layout as needed to prevent conflict with work of other trades or before proper execution of the work.

B. Specifications: The specifications are intended only to complement the drawings; however, work detailed and/or noted only on the drawings or work described only in the specifications shall all be considered as part of the scope of work.

1.8 OBTAINING INFORMATION

A. Obtain from the manufacturer the proper method of installation and connection of the equipment that is to be furnished and installed. Obtain all information that is necessary to facilitate the work and to complete the project.

B. Prior to performing any new work, uncover, locate and determine the routing, size, material and direction of slope of all existing systems to be connected to. The invert elevation of the drains and sewers must be established prior to installation of new systems.

1.9 COOPERATION AND COORDINATION WITH OTHER TRADES

A. The Contract Drawings are diagrammatic only intending to indicate general routing and location of piping and equipment. The Drawings are not intended to show every offset and accessory required, nor every structural difficulty that may be encountered.

B. Where requirements of the applicable codes, plans and/or specifications are in conflict, the most stringent requirement will be included in the Contract. Prior to ordering and/or installing any portion of the work which appears to be in conflict, the work shall be brought to the Architect/Engineer's attention for direction as to what is provided.

C. Final location of plumbing fixtures and other pieces of equipment, whether or not furnished by the Plumbing Subcontractor, requiring plumbing services shall be coordinated with the Architectural Plans. Additional offsets, fittings, etc., shall be provided as needed to meet this requirement at no extra cost to the Owner.

D. If discrepancies exist in the scope of work as to what trade provides items, they shall be reported to the Architect/Engineer prior to signing the Contract. If the discrepancies are not reported, the Plumbing Subcontractor shall furnish such items as needed for a complete and operable system.

E. All work shall be installed in cooperation with other trades.

F. Keep fully informed as to the shape, size and position of all openings required for all apparatus and give information in advance to build openings into the work. Furnish and set in place all sleeves, pockets, supports and incidentals.

G. All distribution systems which require pitch or slope such as plumbing drains, steam and condensate piping shall have the right of way over those which do not. Confer with other trades as to the location of pipes, ducts, lights and apparatus and install work to avoid interference.

H. Prepare and submit for review, coordinated Plans and sections, clearly showing how the work is to be installed in relation to the work of other trades. Work that is installed before coordination with other trades, or that causes interference with the work of other trades shall be changed to correct condition.

I. The Plumbing Contractor shall pay for all permits, inspections, labor, material and fees associated with the various Utility Companies coordination requirements mentioned in this section and for this Contractor's work under this project.

J. HVAC, Plumbing, Fire Protection, and Electrical Drawings are diagrammatic. They indicate general arrangements of mechanical and electrical systems and other work. They do not show all offsets required for coordination nor do they show the exact routings and locations needed to coordinate with structural and other trades and to meet Architectural requirements.

K. In all spaces, prior to installation of visible material and equipment, including access panels, review Architectural Drawings for exact locations and where not definitely indicated, request information from Architect. Where the plumbing work shall interfere with the work of other trades, assist in working out the space conditions to make satisfactory adjustments before installation. Without extra cost to the Owners, make reasonable modifications to the work as required by normal structural interferences. Pay the General Contractor for additional openings, or relocating and/or enlarging existing openings through concrete floors, walls, beams and roof required for any work which was not properly coordinated. Maintain maximum headroom at all locations. All piping, duct, conduit, and associated components to be as tight to underside of structure as possible.

L. If any plumbing work has been installed before coordination with other trades so as to cause interference with the work of such trades, all necessary adjustments and corrections shall be made by the trades involved without extra cost to the Owners.

M. Where conflicts or potential conflicts exist and engineering guidance is desired, submit sketch of proposed resolution to Architect and Engineer for review and approval.

1.10 UTILITY COMPANY COORDINATION

A. This section includes, but is not limited to coordination with the following utilities, agencies and authorities having jurisdiction:

1. Water Department: This Contractor shall coordinate with the local water department and provide all material & labor required to comply with the utility. Notify Engineer of discrepancies between the plans and the local utility company's standards. No extra compensation will be given for corrections required to this Contractor for failure to coordinate with the utility company, but corrections shall be made.
2. Sewer Department: This Contractor shall coordinate with the local sewer department and provide all material & labor required to comply with the utility. Notify Engineer of discrepancies between the plans and the local utility company's standards. No extra compensation will be given for corrections required to this Contractor for failure to coordinate with the utility company, but corrections shall be made.
3. Plumbing Inspector: Review plans and specifications with the local plumbing inspector. Obtain and pay for all permits.
4. Building Inspector: Review plans and specifications with the local building inspector, if not done so by the General Contractor.
5. OSHA Representative: Review plans and specifications with the local OSHA representative, if not done so by the General Contractor.
6. Dig Safe: This contractor shall notify and coordinate with Dig Safe prior to any excavation; digging; trenching; grading; tunneling; augering; boring; drilling; pile driving; plowing-in or pulling-in pipe or other sub-structure; backfilling; demolition; and blasting related to this Contractor.

1.11 BIDDER'S REPRESENTATION

A. By the act of submitting a bid for the proposed contract, the Bidder represents that:

1. The Bidder and all subcontractors have carefully and thoroughly reviewed the drawings, specifications and other construction contract documents and have found them complete and free from ambiguities and sufficient for the purpose intended; further that.
2. The Bidder intends to use are licensed, skilled and experienced in the type of construction represented by the construction contract documents bid upon; further that.
3. Neither the Bidder nor any of the Bidder's employees, agents, intended suppliers or subcontractors have relied upon any verbal representations, allegedly authorized or unauthorized from the Owner, or the Owner's employees or agents including architects, engineers or consultants, in assembling the bid figure; and further that
4. The bid figure is based solely upon the construction contract documents and properly issued written addenda and not upon any other written representation.

1.12 SHOP DRAWINGS

A. Within thirty (30) days after the date of notice to proceed, and before purchasing any materials or equipment, submit for approval a complete itemized list, in six (6) copies, of all materials, equipment and of Subcontractors to be incorporated under this Section.

B. After approval of the list, submit for review a minimum of eight (8) sets of detailed shop drawings. All shop drawings for equipment submitted for review shall include complete Specifications, including type of materials, operating pressures and temperatures, capacities, performance and power requirements to determine compliance with Contract Documents. All data submitted shall be complete for all equipment and shall apply only to this specific project.

C. All shop drawing submittals shall be complete and include all Part 2 - Products of this specification and be clearly identified. No consideration will be given to partial submittals, except with prior approval.

D. Facsimiles of any type will not be accepted.

E. A written letter from the Plumbing Contractor stating all piping systems above and below ground specified herein have been tested, flushed and approved by the Local Plumbing Inspector.

F. A written letter from the Plumbing Contractor stating all water piping systems above and below ground specified herein have been sterilized, flushed and approved by the Local Plumbing Inspector.

G. A written letter from the Plumbing Contractor stating all gas piping systems specified herein have been tested, purged and approved by the local Plumbing and / or Gas Inspector.

H. Provide test certificates, registration forms, diagrams, plans, details, permits, etc. for all backflow devices, as specified herein with a written cover letter from a certified backflow protection device tester stating that all testable backflow devices have been tested.

I. A written letter, stamped and signed by a Registered Structural Engineer, confirming that the pipe hanger system meets the state seismic code requirements.

J. A written cover letter, attached to the insulation materials submittals, from the Insulation Contractor stating an outline for all insulating materials furnished and installed for all piping systems specified herein.

K. If foreign materials are used, Engineer shall be informed in writing together with any information about them he requires for approval.

L. Engineering Design Service's reserves the right to request additional submittals on any item not specified herein under this section.

M. The approval of the equipment does not relieve the Subcontractor of responsibility of shop drawing errors related to details, sizes, quantities, wiring diagram arrangements and dimensions which deviate from the Specifications, and/or job conditions as they exist.

N. Refer to General Requirements for the substitutions of equipment and submittal of shop drawings. If apparatus or materials are substituted for those specified, and such substitution necessitates changes in, or additional connections, piping, supports, or construction, same shall be provided. Plumbing Subcontractor to assume cost and entire responsibility thereof.

O. Regardless of any information included in the shop drawing submitted for review, the requirements of the Drawings and Specifications shall not be superseded in any way by the shop drawing review.

P. Each submittal shall be reviewed, stamped and certified prior to submission to the Architect. Such certification shall be made by the Owner, or Corporate Officer of the Contractor, or by a person duly authorized by the Owner to sign binding agreements for the Contractor. The certification shall state that data and details contained on each shop drawing, layout drawing, catalog data and brochure has been reviewed by the Contractor and that it complies with the Contract Documents in all respects. Shop drawings, layout drawings, catalog data and brochures will not be reviewed and will be returned to the Contractor unchecked unless they are certified.

Q. It is intended that the Contractor submit complete and accurate data at the first submission. If the shop drawing is returned marked "Does not Conform", or "Resubmit For Final Review", only one (1) additional submission will be permitted.

R. Equipment shall be of proper size for its allotted space. Equipment shall be disassembled as required, without invalidating the manufacturer's warranty, so that it can be installed through regular window, door and/or louver openings.

S. The shop drawings and manufacturer's data shall be submitted in a timely manner sufficiently in advance to give ample time for checking, correcting, resubmitting and rechecking if necessary. No claim for delay will be granted for failure to comply with this requirement.

T. A minimum period of two (2) weeks, exclusive of transmittal time, will be required in the Engineer's office each time shop drawings, layout drawings and catalog data and brochures are submitted or resubmitted for review. This time period shall be considered by the Contractor when scheduling his work.

1.13 EXCAVATION AND BACKFILL

A. Pipe bedding shall be in accordance with provisions of sections on excavation and backfill. Work under this section shall commence only after proper bedding material has been provided, graded and properly compacted. Excavation shall be kept open until system has been inspected, tested and approved.

B. The Plumbing Contractor shall observe all excavation, backfilling and compaction of all underground piping associated with work under this section.

1.14 RECORD DRAWINGS

A. All costs related to the following requirements shall be paid for by this Subcontractor.

B. Purchase and maintain at the job site a complete and separate black line set of prints of the Contract Drawings on which accurately indicate daily progress by coloring materials and apparatus as installed. Schedules shall be modified to reflect data consistent with that of the installed equipment. Clearly show all changes to the work as a result of change orders, instructions issued by the Architect or conditions encountered in the field. Accurately indicate the location, size, type and elevation of new utilities and their relationship to existing utilities.

C. The marked up and colored in prints will be used as a guide for determining the progress of the work installed. They shall be inspected weekly and shall be corrected immediately if found inaccurate or incomplete. Requisitions for payment will not be approved until the Drawings are accurate and up_to_date.

D. At the completion of the work, submit one (1) set of marked up prints for review and comment. After review and comment, these marked up prints shall be used in the preparation of the Record Drawings. The Record Drawings shall consist of these prints (corrected) previously indicated, as well as two (2) CAD disks of the Final Coordination Drawings, corrected on the basis of the Architect/Engineer's final comments.

E. Obtain and pay for one (1) set of reproducible mylars and CAD disks (AutoCAD Release 2000 minimum or compatible system) applicable to this Section. Make all modifications to these reproducibles as shown on the marked up prints. Remove all superseded data to show the completed installation.

F. The Record Drawings may be made from the originals of the Contract Drawings. Arrange with the Architect to have these reproducibles made from the originals.

G. Deliver the completed reproducible Record Drawings and CAD disks properly titled and dated to the Architect. These Record Drawings shall become the property of the Owner.

1.15 OPERATING INSTRUCTIONS AND MAINTENANCE MANUALS

A. Operating Instructions: Provide operating instructions to the Owner's designated representative with respect to the operation functions and maintenance procedures for all equipment and systems installed. The cost of such instructions, up to one full day of the Contractor's time, shall be included in the contract price. The cost of providing a manufacturer's representative at the site for instructional purposes shall be included in the Contract Price. Included shall be a letter with two (2) copies containing the name of the person or persons to whom the instructions were given and the dates of the instruction period shall be submitted to the Architect at the completion of the project.

B. Maintenance Manuals: At the completion of the project, turn over to the General Contractor four (4) complete manuals in 3-ring binders containing only that information which specifically applies to this project and all unrelated material shall be deleted, indexed, containing the following:

1. Complete shop drawings of all material and equipment in Part 2 of this section.
2. Operation descriptions of all systems.
3. Provide name, address and telephone number of the manufacturer's representative and service company for each piece of equipment so that the source of replacement parts and service for each item of equipment can be readily obtainable.
4. Preventative maintenance instructions for all systems.
5. Spare parts list of all system components.
6. Copies of all valve charts.
7. During the instruction period this manual shall be used and explained.

1.16 GUARANTEE

A. This Contractor shall obtain in the General Contractor's and Owner's name, the standard written manufacturer's guarantee of all materials furnished under this Section where such guarantees are offered in the manufacturer's published product data. All these guarantees shall be in addition to, and not in lieu of, other liabilities which the Contractor may have by law or other provisions of the Contract Documents. The guarantee shall be for a period of one (1) year minimum from the date of acceptance or final payment.

B. Any failure due to defective material, equipment or workmanship which may develop shall be corrected at no expense to the Owner, including all damage to areas, materials and other systems resulting from such failures.

C. Upon receipt of notice from the Owner of failure of any part of the systems during the guarantee period, the affected parts shall be replaced. Any equipment requiring excessive service shall be considered defective and shall be replaced.

1.17 STORAGE OF MATERIALS

A. Store materials prior to their installation where designated by the General Contractor. This Contractor shall be responsible for all materials stored and protect all installed equipment from injury or defacement.

1.18 PROTECTION OF WORK AND PROPERTY

A. Be responsible for the care and protection of all work included under this Section until it has been tested and accepted.

B. Protect all equipment and materials from damage from all causes including theft. All materials and equipment damaged or stolen shall be repaired or replaced with equal material or equipment.

C. Protect all equipment, outlets and openings with temporary plugs, caps and covers. Protect work and materials of other trades from damage that might be caused by work or workmen and make good damage thus caused.

D. When open flame or spark producing tools such as blow torches, welding equipment, etc., are required in the process of executing the work, the General Contractor will be notified not less than twenty-four (24) hours in advance of the time that the work is to begin and the location where the work is to be performed. Provide, where necessary, fire protective covering and maintain a constant non-working fire watch where work is being performed and until it is completed.

1.19 COOPERATION WITH OTHER TRADES

A. Give full cooperation to other trades and furnish in writing to the Architect any information necessary to permit the work of all trades to be installed satisfactorily and with the least possible interference or delay.

B. Coordination drawings shall be initiated under Section 23.00.00 (15500) of the Specifications. It is their responsibility for preparation of project coordination drawings showing the installation of all equipment, piping, ducts and accessories to be provided under Section 23.00.00 (15500) of the Specifications. These drawings shall be prepared at not less than 3/8 in. = 1 ft. scale, and shall show building room layouts, structural elements, ductwork and lighting layouts of function. A reproducible copy of each drawing prepared shall then be submitted to each Contractor working under Sections 21.00.00 (15300), 22.00.00 (15400) and 26.00.00 (16000), who shall be responsible to coordinate his equipment and systems and shall show these on the drawings submitted. After this Contractor has fulfilled his obligation, he shall return the drawings to the HVAC Contractor. After each drawing has been coordinated between trades, each trade shall sign each drawing, indicating acceptance of the installation. The HVAC Contractor shall then print the coordination original and these prints submitted through the General Contractor to the architect for review and comment, similar to shop drawings. Comments made on these drawings shall result in a correction and re-submittal of the drawings.

C. Furnish to other trades, as required, all necessary templates, patterns, setting plans, and shop details for the proper installation of work and for the purpose of coordinating adjacent work.

D. The Coordination Drawings shall be produced on AutoCAD Release 2006 minimum or compatible system. A disc and one (1) set of reproducible sepias (all-trade composite) shall be provided to the Architect/Engineer for review.

E. The cost of preparing and reproducing these Drawings will be included as part of this Contract.

F. Coordination Drawings shall not be construed as replacing any Shop Drawings.

G. The Plumbing Subcontractor shall be additionally responsible for preparing drawings indicating all the buried or underground plumbing systems. Include in these documents all other underground components such as, but not limited to, underground drainage systems, foundation drainage systems, footings, foundation walls, pits, tie beams, electric and telephone duct banks.

1.20 SITE VISITATION

A. Prior to submitting bid, visit site and identify existing conditions and difficulties that will affect work of this section. Demolition work will require careful site examination prior to bidding. No compensation will be granted for additional work caused by unfamiliarity with site conditions that are visible or readily construed by experienced observers.

1.21 DEMOLITION

A. Prior to submitting bid, visit site and identify existing conditions and difficulties that will affect work of this section. Demolition work will require careful site examination prior to bidding. No compensation will be granted for additional work caused by unfamiliarity with site conditions that are visible or readily construed by experienced observers.

B. Prior to commencing demolition, contractor shall identify with owner any equipment to be returned to the owner after demolition. All other debris shall be disposed of by this contractor in accordance with all applicable regulations. Any shutdowns required for demolition shall be coordinated with building owner to avoid impact to operations.

C. During demolition, any equipment found to be abandoned shall be demolished. Existing unused connections to existing ducts or piping shall be capped accordingly. Abandoned elements built into walls or located above existing inaccessible ceilings shall remain and ends capped and marked abandoned.

D. During demolition, any piping found to be abandoned shall be removed in its entirety.

E. Under demolition, the following is, in brief, the extent of the work to be performed by the Plumbing Contractor under this contract.

F. The plumbing contractor shall be responsible for the disconnection and removal of the existing equipment, fixtures, piping, valves, etc. in designated areas. Cut & cap piping back to mains. Patch all roof and wall penetrations to match existing.

G. This contractor shall protect work against injury or damage; and carefully store material and equipment to be relocated. Open ends of work shall be closed with temporary covers or plugs during storage and construction to prevent entry of obstructing material.

H. Refer to plumbing relocation drawings for new locations of equipment called out "To be Relocated." All relocated equipment shall have associated electrical and controls equipment relocated accordingly.

1.22 ASBESTOS REMOVAL (WHERE APPLICABLE)

A. Should this Subcontractor or any of its Sub-Subcontractors encounter any asbestos and/or asbestos related products or materials (the "asbestos materials") during the performance of its work, this Subcontractor shall stop work immediately and so inform the General Contractor and the Owner of the presence of asbestos.

1.23 CONTINUITY OF SERVICE AND SCHEDULING OF WORK

A. Continuity of all services shall be maintained in all areas which will be occupied during the construction period. When an interruption of service becomes necessary, such shall be made only upon consent of the Owner and at a time outside normal working hours as he shall designate.

B. Refer to the overall scheduling of the work of the project. Schedule work to conform to this schedule and install work to not delay nor interfere with the progress of the project.

1.24 ACCESSIBILITY

A. Assure and be responsible for the adequacy of shafts and chases, the adequate clearance in double partitions and hung ceilings for the proper installation of the work. Cooperate with all other trades whose work is in the same space. Such spaces and clearances shall, however, be kept to the minimum size required.

B. Locate all equipment, which must be serviced, operated, adjusted or maintained fully accessible positions. Equipment shall include, but not be limited to, valves, traps, cleanouts, motors, controllers, filters, dampers, starters, coils, fire dampers, smoke dampers and drain points. If required for better accessibility, furnish access doors for this purpose. Minor deviations from drawings may be made to allow for better accessibility, and the engineer shall approve any change.

C. Access Panels

1. Provide access panels for installation in concrete block walls or gypsum wallboard ceilings and partitions in locations, which require access for service to the items located behind the permanent gypsum wallboard or concrete block finish.
2. Access panels shall be installed where required to gain access to valves, controls and etc.
3. Access panels located in fire rated partitions shall be fire panels. The frame and panel assembly of these fire panels shall be manufactured under the Factory Inspection Service of the Underwriters' Laboratories, Inc., and shall bear a label reading: "Frame and Fire Panel Assembly, Rating 2 hours. (B) Temperature Rise 30 Minutes, 250° F. Maximum." Rated panels shall be equipped with automatic closing mechanism and be self-latching.
4. Panels shall be flush, insulated, contain continuous steel hinge and screwdriver operated flush cam latch. Panels shall be rated equal to the assembly that they are being installed in panels shall be UL listed.
5. Panel size shall be minimum 12 inches x 12 inches except furnish a larger size if required to service a particular item.
6. The exact location and size of each access panel shall be noted on a shop drawing and reviewed with, and approved by, the Architect and Engineer in writing prior to installation.

1.25 SUBSTANTIAL COMPLETION

A. When Subcontractor considers Work under this Section (or designated portion of Work) is substantially complete, submit written notice through the General Contractor with a list of items remaining to be completed or corrected.

B. Should Architect and/or his Engineer observe and find Work is not substantially complete, he will promptly notify Subcontractor through the General Contractor in writing, listing observed deficiencies.

C. Subcontractor shall remedy deficiencies and send a second written notice of substantial completion.

D. When Architect and/or his Engineer finds work is substantially complete he will prepare a Certificate of Substantial Completion in accordance with provisions of General Conditions.

1.26 FINAL COMPLETION

A. When Subcontractor considers Work under this Section is complete, submit through the General Contractor written certification that:

1. Contract documents have been reviewed.
2. Work has been inspected for compliance with Contract Documents.
3. Work has been completed in accordance with Contract Documents and deficiencies listed with Certificate of Substantial Completion have been corrected.
4. Equipment and systems have been tested, adjusted and balanced and are fully operational.
5. Operation of systems has been demonstrated to Owner's personnel.
6. Work is complete and ready for Architect's and/or his Engineer's final review.
7. Should Architect and/or his Engineer observe and find work incomplete, he will promptly suspend his review and notify Subcontractor in writing through the General Contractor.
8. Subcontractor shall complete his work, remedy deficiencies and send a second certification of final completion.
9. Architect and/or his Engineer shall, upon receipt of a second certification of completion, make a second review and shall notify the Subcontractor in writing through the General Contractor listing observed deficiencies.
10. When Architect and/or his Engineer finds work complete, he will consider close out submittals.

1.27 REOBSERVATION

A. Should status of completion of Work require additional services by Architect and/or his Engineer due to failure of Work to conform with Subcontractor's claims on initial Architect and/or Engineer's review for Substantial Completion or for Final Completion, Owner will deduct the amount of Architect and/or his Engineer's compensation for additional services from final payment to Subcontractor.

1.28 CERTIFICATES OF APPROVAL

A. Upon completion of all work, furnish in duplicate certificates of inspections from all inspectors and authorities having jurisdiction, notarized letters from the manufacturers stating that authorized factory engineers have inspected and tested the operation of their respective equipment and found same to be in satisfactory operating condition.

1.29 INSPECTION AND TEST

A. If inspection of materials and/or equipment installed shows defects, such defective materials and/or equipment shall be replaced at no cost to the General Contractor or Owner, and the inspection and tests repeated.

B. Make all reasonable tests as required and prove the integrity of all work and leave the entire installation in correct adjustment and ready to operate.

1.30 MATERIALS AND EQUIPMENT STANDARDS

A. Where materials or equipment are specified by patent proprietary name or name of the manufacturer, such specification shall be deemed to be used for the purpose of establishing a standard for that particular item. No equipment or material shall be used unless previously approved by the Architect.

B. Substitutions may be offered for review provided the material, equipment or process offered for consideration is equal in every respect to that indicated or specified and only if the term "approved equal" appears. The request for each substitution must be accompanied by complete specifications together with drawings or samples to properly appraise the materials, equipment or process.

C. If a substitution of materials or equipment in whole or in part is made, the Contractor shall bear the cost of any changes necessitated by any other trade as a result of said substitution.

D. Manufacturer's directions shall be followed in the delivery, storage and installation of any equipment. Notify the Architect/Engineer, in writing, of any conflict between the Contract Drawings and the manufacturer's requirements and obtain a written response prior to proceeding with work. Should the Subcontractor fail to comply with this, he/she shall bear the costs of any corrections which may be required.

E. The Subcontractor shall furnish and install all equipment, accessories, connections and incidentals to complete the work under this Section.

F. As of January 4, 2014; all products installed associated with any plumbing system utilized to convey potable drinking water shall comply with the Reduction of Lead in Drinking Water Act.

1.31 EQUIPMENT DEVIATIONS

A. Where proposals to use an item of equipment other than that specified which requires any redesign of the structure, partitions, foundations, piping, wiring or any other part of the fire protection, plumbing, mechanical, electrical or architectural layout, all such redesign, and all new drawings and detailing required therefore, shall be prepared by the Architect at the Contractor's expense.

B. Where such approved deviation requires a different quantity and arrangement of ductwork, piping, wiring, conduit, and equipment from that specified or indicated on the drawings, furnish and install any such ductwork, piping, structural supports, insulation, controllers, motors, starters, electrical wiring and conduit, and any other additional equipment required by the system, at no additional cost to the Owner.

1.32 EQUIPMENT PADS

A. All grade and floor mounted equipment shall be provided with a reinforced concrete pad. Refer to architectural and structural plans for pad locations, thickness, sizes, and construction requirements.

B. Housekeeping pads serving equipment shall be a minimum four (4) inch high concrete housekeeping pads, unless otherwise shown or specified.

C. Housekeeping pads serving equipment shall be a minimum of four (4) inches wider and longer than vibration isolation base or structural base of equipment being set on pad.

B. If grade and/or floor mounted equipment is shown but no pad indicated on the architectural plans the contractor shall be responsible for clarifying the necessity, size, and location of any pads during the bidding process. No additional compensation will be given for pads which are required by this section but not indicated on the plans if no formal request for clarification was issued during the bidding process.

1.33 ELECTRIC ROOM REQUIREMENTS

A. Do not install any piping or equipment in or through electrical rooms, transformer rooms, electrical closets, telephone rooms or elevator machine rooms, unless piping or equipment is intended to serve these rooms. Additionally, no piping shall be installed above electric panels. If the Contractor violates this requirement, he shall remove and/or relocate all items as required at his expense and to the satisfaction of the Architect.

1.34 SCAFFOLDING, RIGGING AND HOISTING

A. Provide scaffolding, rigging, hoisting and services necessary for delivery, erection and installation of material, equipment and apparatus furnished under this division. Remove same from premises upon completion of work.

B. Coordinate propose routing with architect prior to rigging and protect all existing building components against damage.

1.35 CONFLICT BETWEEN PLANS AND SPECIFICATIONS

A. In case of conflict between the contract drawings and specifications, the Engineer shall determine which takes precedence.

1.36 EQUIPMENT CONNECTIONS

A. Make all final plumbing connections to all new as well as existing to be relocated equipment not furnished as part of this Section, such as but not limited to Medical Equipment, Laboratory Equipment or similar items requiring plumbing services. Provide all rough plumbing systems to these same items of equipment. Refer to the equipment shop drawings and manufacturers' requirements for final locations of connections prior to laying out or installing any work. Furnish and install all traps with cleanouts and heavy-duty brass loose key angle valve supply stop kits. Traps and angle valve kits shall include polished chrome-plated escutcheons. All supply stops shall have threaded or sweat solder inlet. Every faucet shall have a supply stop kit for each water supply. All exposed traps and supply stop kits shall be polished chrome-plated.

1.37 SEISMIC RESTRAINTS

A. It is the intent of this seismic specification to keep all plumbing building system components in place during a seismic event.

B. All plumbing systems must be installed in strict accordance with seismic codes, component manufacturer's and building construction standards. Whenever a Conflict occurs between the manufacturer's or construction standards, the most stringent shall apply.

C. This contractor shall engage a professional structural engineer registered in the jurisdiction of this project to review the entire installation to determine all seismic restraint requirements and methods. This contractor shall submit a report outlining the structural engineer's review as well as seismic restraint shop drawings and supporting calculations prepared by the professional structural engineer for review by the Architect.

D. Seismic restraints shall be designed in accordance with seismic force levels as detailed in the applicable building code.

PART 2 - PRODUCTS

2

2.1 PLUMBING PIPE AND FITTINGS

A. Pipe and fittings shall be of US manufacture and shall conform to the latest ANSI, ASTM, AWWA and NFPA Standards including latest amendments.

B. Each length of pipe, each pipe fitting, trap, material and/or device used in the respective system shall have cast, stamped or indelibly marked on it, the maker's name or mark, weight and quality of the product when such marking is required by the approved standard that applies.

C. Type A:

Type L hard drawn copper tubing with wrought copper sweat fittings joined with approved 95/5 lead free tin antimony solder.

D. Type B:

PVC Schedule 40 solid wall pipe and PVC drainage fittings joined by solvent welding.

This system is intended for use in non-pressure applications where the operating temperature will not exceed 140° F.

PVC cellular core pipe and PVC drainage fittings joined by solvent welding will not be approved as an equal.

All buried piping shall be provided with an electrically continuous corrosion resistant yellow tape marker and tracer wire (minimum AWG 14) to facilitate locating.

Vent through roof shall terminate utilizing no hub cast iron soil pipe and fittings or ABS Schedule 40 solid wall pipe.

E. Type C:

Type L (ASTM B 819) hard drawn seamless medical gas copper tubing with wrought copper, listed or approved fittings (ANSI B16.22) made especially for brazed connections. Piping shall bear one of the following markings: OXY, MED, OXY/MED, ACR/OXY or ACR/MED. Joints shall be brazed with silver brazing alloy exhibiting a melting temperature in excess of 1,000 degrees F; flux shall not be used. Piping valves, fittings and other components shall be pre-washed, expressly for oxygen service, and delivered with protective caps. Installation shall be in accordance with the latest requirements of NFPA 99.

F. Joints between different piping materials shall be made with a mechanical joint or dielectric fitting.

G. Pipe and fittings shall be in accordance with the following:

1. Cold Water Type A
2. Hot Water Supply and Recirculation Type A
3. Sanitary, Waste and Vent Inside Buried Type B
4. Sanitary, Waste and Vent Within the Building Type B
5. Waste and Vent 1 1/2 inches and Smaller Type B
6. Medical Compressed Air Type C
7. Medical Vacuum Type C

2.2 VALVES

A. Shutoff valves on water piping 1/2 inch through 2 1/2 inch shall be Apollo 77LF series, lead free, bronze body ball valve, full port, chrome plated bronze ball, 600 psi WOG.

B. Balancing valve assembly for hot water recirculation shall be as manufactured by Therm Omega Tech Product.

1. Balancing valve assembly 1/2 inch to 1 inch shall be Circuit

C. Certifications:

1. Only Owens Corning SSL II with ASJ Max and VaporWick pipe products are GREENGUARD Indoor Air Quality Certified and GREENGUARD Gold Certified.
2. Owens Corning pipe products are certified by SCS Global Services to contain a minimum of 53% recycled glass content, 31% pre-consumer and 22% post-consumer (except Flexwrap Insulation).
3. Owens Corning pipe products are UL listed and labeled (except Flexwrap Insulation and Pipe and Tank Insulation).
4. No Wrap FIBERGLAS Pipe Insulation and Jacketed FIBERGLAS Pipe Insulation (ASJ Max, VaporWick, Evolution, ASJ) have received the Cradle to Cradle Products Innovation Institute's Bronze Level Material Health Certificate.
5. These products Environmental Product Declaration (EPD) has been certified by UL Environment.
6. Molded Fibrous Glass Pipe Insulation: Comply with ASTM C547, Type I, Grade A; and Type IV, Grade B; and ASTM C585, for sizes required and of a type suitable for installation on piping systems as required. One of the following types shall be used:
   a. For indoor systems operating at temperatures from 0°F (-18°C) to +1000°F (538°C) with heat-up schedule:

I. Owens Corning® SSL II® with ASJ Max FIBERGLAS Pipe Insulation.

   b. For systems operating at temperatures up to +850°F (232°C), no heat up-schedule required.
   c. For systems operating at temperatures to +1000°F (538°C) with heat-up schedule and always above the ambient temperature:

I. Owens Corning No Wrap Pipe Insulation.

7. For systems operating below ambient (32°F (0°C) to +65°F (18°C)) temperature:
   a. Owens Corning VaporWick® Pipe Insulation. (see Plumbing Pipe Insulation - VaporWick® Pipe Insulation)
8. Perpendicular Oriented Mineral Fiber Insulation: ASTM C1393, Type IIIB, Category 2:
   a. For piping equal to or larger than 10 in (250 mm) diameter operating at temperatures up to +850°F (454°C):

I. Owens Corning Flexwrap FIBERGLAS Insulation.

9. Perpendicular Oriented Mineral Fiber Insulation: ASTM C1393, Type II, Category 1:
   a. For piping equal to or larger than 10 in (250 mm) diameter operating at temperatures up to +650°F (343°C):
   b. Owens Corning® FIBERGLAS Pipe and Tank Insulation.
10. Provide accessories per insulating system manufacturer's recommendations, including the following:
   a. Closure Materials: Butt strips, bands, wires, staples, mastics, adhesives, and pressure-sensitive tapes. a. Mold resistant mastics are recommended for chilled water applications.
   b. Field-Applied Jacketing Materials: Sheet metal, plastic, canvas, fiberglass cloth, insulating cement, PVC fitting covers.
   c. Support Materials: Hanger straps, hanger rods, saddles, support rings, and high density inserts.
   d. Adhesives For Indoor Applications: VOC content of 50 g/L or less when calculated according to 40 CFR 59, Subpart D (EPA Method 24).
11. Insulation shall be in accordance with the following schedule:

System	Insulation Thickness
Cold Water	1/2"
Hot Water and hot water recirculation	1"

.4 HANGERS AND SUPPORT

A. Pipe hangers, pipe anchors, auxiliary steel, wood blocking and fixture supports shall be furnished and set by this Contractor, and he shall be responsible for their proper and permanent location. This Contractor shall be responsible for all core drilling.

B. All piping shall be rigidly supported from the building structure by means of approved hangers and supports. The hanging and support of all piping system shall conform to the ANSI/MSS-SP.58 AND MSS-SP 69 latest edition. This Contractor shall furnish and install all required auxiliary steel required for hanging of piping.

C. All horizontal piping shall be hung with approved adjustable malleable iron pipe hangers.

1. Cast iron soil pipe shall be supported at five (5) foot intervals except where ten (10) foot lengths of piping are used, then ten (10) foot intervals are acceptable. Hangers shall be provided at each joint, at each horizontal branch connection and P-Traps must be supported individually. Hangers shall be adequate to maintain alignment, prevent sagging and shall be placed on or immediately adjacent to the coupling. Horizontal piping shall be braced against horizontal movement with sway bracing. Supports shall be placed directly beneath horizontal fittings that connect to the stack.

   Installation shall conform to the requirements of the latest issue of CISPI Standard 301, ASTM A-888 and A-74.

2. Copper tubing 1-1/2 inch and larger shall be supported at ten (10) foot intervals. Copper tubing 1-1/4 inch and smaller shall be supported at six (6) foot intervals.
3. Steel piping shall be supported at six (6) foot intervals for piping 1/2 inch and smaller, at eight (8) foot intervals for 3/4 inch and one inch piping and at ten (10) foot intervals for piping 1-1/4 inch and larger.
4. Plastic piping shall be supported at 3 foot intervals for 1-1/4 inch piping and at 4 foot intervals for 1 1/2 inch piping and larger.
5. Cross Linked Polyethylene (PEX) tubing 1/2 inch through 1 1/2 inch shall be supported at **32 inch** intervals.
6. Corrugated stainless steel tubing (CSST) for fuel gas piping systems shall be supported at six (6) foot intervals for piping 1/2 inch and at eight (8) foot intervals for 1 inch and larger.

D. Vertical hangers

1. Steel piping shall be supported at each story height and at not more than ten (10) foot intervals.
2. Copper tubing shall be supported at each story height and at not more than ten (10) foot intervals.
3. Plastic piping shall be supported at each floor.
4. Cross Linked Polyethylene (PEX) tubing 1/2 inch through 1 1/2 inch shall be supported at **32 inch** intervals.
5. Corrugated stainless steel tubing (CSST) for fuel gas piping systems shall be supported at each floor.
6. Glass piping shall be supported with padded riser clamps at each floor level.

E. Interior hangers for piping sizes four (4) inches and smaller shall be Carpenter & Paterson, No. 1A band type, Grinnell Company, Calco Steel Products Company or equal, black steel with hanger rods with machine threads. Hangers for piping larger than four (4) inches shall be the adjustable clevis hanger type, malleable iron with extension rod. Chain, strap, perforated bar or wire hangers will not be approved. Where used for uninsulated copper tubing, all hangers shall be copper plated and chrome plated piping. Insulation shields shall be provided on all horizontal insulated piping at each hanger or support location. Insulation shields shall be galvanized steel, 180 degrees arc and centered on the hanger or support. On diameters 4 inches and smaller, shield shall be 12-inch long, 18 gauge steel. On diameters 5 inches and 6 inches, shield shall be 18-inch long, 16 gauge steel. On diameters 8 inches and 10 inches, shield shall be 24-inch long, 14 gauge steel. On diameters greater than 10 inches, shield shall be 24-inch long, 12 gauge steel. Structure attachments shall be as manufactured by Carpenter & Patterson and shall be suitable to carry the weight.

F. Approved gang hangers may be used in lieu of separate hangers on pipes running parallel to each other and close together.

G. All fixtures and equipment shall be supported and fastened in a satisfactory manner and in accordance with fixture manufacturer's recommendations.

H. Where chair carriers are required, they shall be completely concealed in the building construction and shall rigidly support the fixture from the floor. Chair carrier shall support fixtures in such a manner that no part of the fixture will be supported by the wall or partition. Chair carriers shall be furnished complete with necessary bolts, nuts and washers as well as connecting nipples of the proper length with gaskets for the fixture connection. All available or optional anchor foot assemblies shall be utilized. Carriers must fit in available space and shall be of the special narrow type or compact style where necessary. Chair carriers for water closets and urinals shall include flushometer supply pipe support. Flushometer supply pipe shall always be provided with a concealed support regardless of if the design includes a carrier or not.

I. Wherever wood blocking is required to insure adequate support of fixtures and related piping, it shall be provided by this Contractor and it shall be fire treated.

J. All inserts in new concrete construction shall be capable of developing the full strength of the rod or bolt used in them and shall be either continuous insert type or malleable iron concrete inserts for rod sizes 3/8 inch to 7/8 inch. Continuous inserts shall have anchors every 4 inches and shall extend 1-1/2 inches above the back of the insert and shall hook to provide anchor. All inserts shall be tied to the reinforcing steel rods with wire and properly sized reinforcing rods shall be inserted through the special holes, hooks or brackets provided in or on the inserts to securely anchor insert to the structure.

K. Seismic Restraints: It is the intent of this seismic specification to keep all mechanical building system components in place during a seismic event.

1. All mechanical systems must be installed in strict accordance with seismic codes, component manufacturer's and building construction standards. Whenever a conflict occurs between the manufacturer's or construction standards, the most stringent shall apply.
2. This contractor shall engage a professional structural engineer registered in the jurisdiction of this project to review the entire installation to determine all seismic restraint requirements and methods. Contractor shall submit a report outlining the structural engineer's review as well as seismic restraint shop drawings and supporting calculations prepared by the professional structural engineer for review by the Architect.
3. Seismic restraints shall be designed in accordance with seismic force levels as detailed in the applicable building code.

.5 SLEEVES, ESCUTCHEONS AND FIRESTOPPING

A. Sleeves shall be furnished and set by this Contractor and he shall be responsible for their proper and permanent location. This Contractor shall be responsible for all core drilling. Core openings shall have link-seal fire-rated penetration closures.

B. This Contractor shall provide steel sleeves at all points where pipes and all other work under his charge pass through masonry, concrete or wood. Sleeves shall have flanges or wings at mind-points to prevent sleeve from slipping through the floor or wall. Pipe sleeves shall be sufficient diameter to provide approximately 1/4 inch clearance around the pipe or the insulation on insulated systems. Sleeves through walls shall end flush with the surface of the walls. Sleeves in floors shall extend one inch above the floor and after installation of piping shall be packed, firestopped and made watertight. Sleeves in exterior walls shall have waterstop plates, shall end flush with the surface of the walls, shall have link-seal penetration closures and shall be of a diameter that is compatible with the Link Seal System.

C. Seal the sleeve penetrations with firestopping and smoke stopping systems as manufactured by Dow Corning, Bio-Shield, Rectorseal Metacaulk, 3M, Fyre Putty or equal. Where pipes penetrate fire rated construction, the openings shall be packed with the material and system that shall maintain the integrity of the fire rating as detailed in the UL Fire Resistance Directory.

D. Firestop sealant shall be chemical compatible with the associated plastic pipe material and comply with the FBC System Compatible Program.

1. Note: Refer to architectural drawings for rated walls and partitions. Where there are no architectural drawings or they do not indicate rated walls and partitions, the following guidelines shall be used: All floors, corridor walls, party walls, mechanical room walls, duct and pipe chase walls, stairwells, trash room and chute walls shall be considered minimum two hour fire rated walls.

1. General
   a. Provide through-penetration firestop systems that are compatible with one another, with the substrates forming openings, and with the items, if any, penetrating through-penetration firestop systems, under conditions of service and application, as demonstrated by through-penetration firestop system manufacturer based on testing and field experience.
   b. Provide components for each through-penetration firestop system that are needed to install fill materials. Use only components specified by the firestopping manufacturer and approved by the qualified testing agency for the designated fire-resistance-rated systems.
2. Acceptable Manufacturers
   a. Subject to compliance with through-penetration firestop systems (XHEZ) listed in Volume 2 of the UL Fire Resistance Directory, provide products of the following manufacturers as identified below:
      1) Acceptable Manufacturer: Specified Technologies Inc.
      2) Substitutions: Not permitted.
      3) Single Source: Obtain firestop systems for each type of penetration and construction condition indicated only from a single manufacturer.
3. Materials
   a. Use only firestopping products that have been tested for specific fire-resistance-rated construction conditions conforming to construction assembly type, penetrating item type or joint opening width and movement capabilities, annular space requirements, and fire-rating involved for each separate instance.
   b. Intumescent Sealants: Single component intumescent latex formulations containing no water soluble intumescent ingredients capable of expanding a minimum 8 times, the following products are acceptable:
      Specified Technologies, Inc. (STI) SpecSeal Series SSS Intumescent Sealant
      Specified Technologies, Inc. (STI) SpecSeal Series LCI Intumescent Sealant
   c. Endothermic Sealants: Single component latex formulations that upon cure do not re-emulsify during exposure to moisture, the following products are acceptable:
      Specified Technologies, Inc. (STI) SpecSeal Series LC Endothermic Sealant
   d. Elastomeric Sealants: Single component latex formulations that upon cure do not re-emulsify during exposure to moisture and accommodate minimum ±25 percent movement, the following products are acceptable:
      Specified Technologies, Inc. (STI) SpecSeal Series AS Elastomeric Spray
      Specified Technologies, Inc. (STI) SpecSeal Series ES Elastomeric Sealant
   e. Firestop Devices: Factory-assembled steel collars lined with intumescent material capable of expanding a minimum 30 times sized to fit specific outside diameter of penetrating item, the following products are acceptable:
      Specified Technologies, Inc. (STI) SpecSeal Series SSC Firestop Collars
      Specified Technologies, Inc. (STI) SpecSeal Series LCC Firestop Collars
   f. Wall Opening Protective Materials: Intumescent, non-curing pads or inserts for protection of electrical switch and receptacle boxes to reduce horizontal separation to less than 24" (610 mm), the following products are acceptable:
      Specified Technologies, Inc. (STI) SpecSeal Series SSP Firestop Putty Pads
      Specified Technologies, Inc. (STI) SpecSeal Series EP PowerShield Insert Pads
   g. Firestop Putty: Intumescent, 100% solids, non-hardening, water resistant, butyl rubber based putties containing no solvents or silicone compounds, the following products are acceptable:
      Specified Technologies, Inc. (STI) SpecSeal Series SSP Firestop Putty
   h. Wrap Strips: Single component intumescent elastomeric strips faced on both sides with a plastic film and capable of expanding a minimum 30 times, the following products are acceptable:
      Specified Technologies, Inc. (STI) SpecSeal Series RED2 Wrap Strip
      Specified Technologies, Inc. (STI) SpecSeal Series BLU2 Wrap Strip
   i. Mortar: Portland cement based dry-mix product formulated for mixing with water at Project site to form a non-shrinking, water-resistant, homogeneous mortar, the following products are acceptable:
      Specified Technologies, Inc. (STI) SpecSeal Series SSM Firestop Mortar
   j. Silicone Sealants: Moisture curing, single component, silicone elastomeric sealant for horizontal surfaces (pourable or nonsag) or vertical surface (nonsag), the following products are acceptable:
      Specified Technologies, Inc. (STI) SpecSeal SIL300 Silicone Firestop Sealant
      Specified Technologies, Inc. (STI) SpecSeal SIL300 SL Self-Leveling Silicone Firestop Sealant
   k. All-Weather Coatings: Moisture curing, single component silicone copolymer elastomeric spray coatings for horizontal surfaces where greater water resistance is required or inclement weather is anticipated, the following products are acceptable:
      Specified Technologies, Inc. (STI) SpecSeal FT305 Firestop Spray
   l. Silicone Foam: Multicomponent, silicone-based liquid elastomers, that when mixed, expand and cure in place to produce a flexible, non-shrinking foam, the following products are acceptable:
      Specified Technologies, Inc. (STI) Pensil 200 Silicone Foam
   m. Cast-In-Place Firestop Device: Single component molded firestop device installed on forms prior to concrete placement with totally encapsulated, tamper-proof integral firestop system and smoke sealing gasket, the following products are acceptable:
      Specified Technologies, Inc. (STI) SpecSeal CD Cast-In Firestop Device
   n. Firestop Plugs: Re-enterable, foam rubber plug impregnated with intumescent material capable of expanding minimum 10 times with expansion beginning at 350°F (177°C) for use in blank openings and cable sleeves, the following products are acceptable:
      Specified Technologies, Inc. (STI) SpecSeal Series FP Firestop Plug
   o. Fire-Rated Closet Flange Gasket: Molded, single-component, intumescent gasket for use beneath a closet flange in floor applications, the following products are acceptable:
      Specified Technologies, Inc. (STI) SpecSeal Series CF34 Closet Flange Firestop Gasket
   p. Protective Wrap: Endothermic Wrap incorporating foil scrim evaluated for protection of cable pathways, liquid fuel lines, as well as in through-penetration and membrane-penetration firestopping. Testing to incorporate protection of Electrical Metallic Tubing (EMT), Rigid Metallic Conduit (RMC), Cable Trays, single and/or multi containment liquid fuel lines. Wrap to have a maximum weight of no greater than 1.4 lbs/ft2 and allow for the use of steel tie wire when installed around piping, conduits, and/or cable trays. The following products are acceptable:
      Specified Technologies, Inc. (STI) E-Wrap™ Endothermic Wrap

G. Pipe Sleeves shall be according to the following:

1. Sleeves on pipes passing through masonry or concrete construction shall be scheduled 40 galvanized steel pipe.
2. Sleeves on pipes passing through wood or drywall partitions shall be 16 gauge galvanized steel.

H. Whenever new penetrations to a previously poured slab are required for the installation of floor drains, shower drains, mop receptors, flush floor cleanouts or similar items of plumbing, these penetrations shall be totally sealed with a fire and water stop sealant. Sealant shall be Dow Corning fire stop sealant, Catalog No. 2000. Hourly fire rating in hours must be meet the requirements of the slab being penetrated.

I. Provide chrome plated brass escutcheons with set screws for exposed piping in all areas. In mechanical rooms use plain brass or cast iron escutcheons suitable for painting. All escutcheons shall be sized to fit the bare pipe or insulation in a snug and neat manner. They shall be of sufficient size to cover sleeves openings for the pipes and of sufficient depth to cover sleeves projecting above floors.

J. Bored holes within wood construction. A hole not greater in diameter than 40 percent of the stud width is permitted to be bored in any wood stud. Bored holes not greater than 60 percent of the width of the stud are permitted in nonbearing partitions or in any wall where each bored stud is doubled, provided not more than two such successive doubled studs are so bored. In no case shall the edge of the bored hole be nearer than 5/8 inch (15.9 mm) to the edge of the stud. Bored holes shall not be located at the same section of stud as a cut or notch.

2.6 CLEANOUTS

A. Piping shall be rigidly affixed to the structure on either side of the building expansion joint.

B. Flexible connections and piping expansion joints shall be suitable for the fluid type and pressure being transferred.

2.7 PLUMBING FIXTURES

A. Refer to architectural room elevation drawings for fixture mounting heights.

B. Each individual fixture shall be provided with required supply stops for each water service. Supply stops and supply risers shall be lead-free to comply with NSF-61G.

C. Water Conservation: Provide water conservation fixtures and trim in incompliance with the following maximum water use requirements.

1. Lavatory Faucet Public: 0.50 gallons per minute.

D. All exposed finishes not limited to fixtures, flushometers, trip levers, faucets and shower assemblies shall be selected and confirmed by the architect.

E. Sink, S-1:

Fixture: Provided by vendor, plumber to make final connections

Miscellaneous: McGuire heavy duty polished chrome-plated cast brass angle valve kits, loose key, flexible braided stainless steel risers, 1-1/2 inch x 1-1/2 inch schedule 40 adjustable "P" trap with cleanout plug and extension to wall and escutcheon

F. Sink, S-2:

Fixture: Provided by vendor, plumber to make final connections

Miscellaneous: McGuire heavy duty polished chrome-plated cast brass angle valve kits, loose key, flexible braided stainless steel risers, 1-1/2 inch x 1-1/2 inch schedule 40 adjustable "P" trap with cleanout plug and extension to wall and escutcheon

2.8 SHOCK ABSORBERS

E. Maintenance free water hammer arresters shall be furnished and installed at all locations in the water systems where quick acting valves are installed as well as wherever water hammer may occur.

F. Examples of such locations are as follows:

1. As indicated on the drawings.
2. Sterilizer water supplies.
3. Autoclaves.

G. Water hammer arresters shall be as manufactured by Precision Plumbing Products or approved equal. Arresters shall be installed at each and every multiple of fixtures or items as listed above and/or as indicated on drawings. Water hammer arresters may serve groups of fixtures.

D. Sizing, placement, tested, certified and shall be in accordance with Plumbing and Drainage Institute Standard PDI-WH-201 and the manufacturer's recommendations.

E. Water hammer arresters shall be as follows:

Designation	Fixture Unit Rating	Model
SA-A	1-11	SC-500A

F. Water hammer arrestors are maintenance free and do not require an access panel per the manufacturer.

G. Air chambers will not be approved as an equal.

H. Access panels shall be required at shock absorbers.

Shock absorbers located within chases shall be extended vertically within chase to above finished ceiling. Shutoff valves shall be installed directly before the device to enable engineering to replace them without having to shut down the entire main.

2.9 PIPE IDENTIFICATION AND VALVE TAGS

A. All piping, except that piping which is within inaccessible chases, shall be identified with semi-rigid plastic identification markers equal to Seton Setmark pipe markers. Direction of flow arrows are to be included on each marker. Each marker background shall be appropriately color coded with a clearly printed legend to identify the contents of the pipe in conformance with the "Scheme for the Identification of Piping Systems" (ANSI/ASME A13.1-2007). Setmark snap-around markers shall be used for overall diameters up to six inches and strap-around markers shall be used above six inch overall diameters. Markers shall be located adjacent to each valve, at each branch, at each cap for future, at each riser take off, at each pipe passage through wall, at each pipe passage through floors, at each pipe passage to underground and on vertical and horizontal piping at 20 foot intervals maximum.

B. All valves shall be designated by distinguishing numbers and letters carefully coordinated with a valve chart. Valve tags shall be 19 gauge polished brass, 1-1/2 inch diameter with stamped black filled letters similar to Seton S type 250-BL or approved equal. Lettering shall be 1/4 inch high for type service and 1/2 inch for valve number. Tag shall be attached to valves with approved brass "S" hooks, or brass jack chain. Whenever a valve is above a hung ceiling, the valve tag shall be located immediately above the hung ceiling.

C. Furnish a minimum of two typed valve lists to be framed under glass or Plexiglass. Each chart shall be enclosed in an approved .015 inch thick plastic closure for permanent protection. Valve numbers shall correspond to those indicated on the Record Drawings and on the printed valve lists. The printed list shall include the valve number, location and purpose of each valve. It shall state other necessary information such as the required opening or closing of another valve when one valve is to be opened or closed. Printed framed valve lists shall be displayed in each Mechanical Room or in a location designated by the Owner.

D. Equipment nameplates shall be 3/4 inch by 2-1/2 inch long .02 inch aluminum with a black enamel background with engraved natural aluminum letters similar to Seton Style 2065-20. Nameplate shall have pressure sensitive taped backing.

E. All interior and exterior underground piping and utilities shall have metalized warning tape installed above the pipe or line that identifies the specific system buried below. Tape shall consist of a minimum 3.5 mil solid foil core encased in a protective plastic jacket (total thickness 5.5. mils) and be 6" wide with black lettering imprinted on a color coded background that conforms to APWA color code specifications. Tape shall be installed from 18" to 30" above the pipe and in no case less than 6" below grade.

F. All interior and exterior underground non-metallic piping and utilities shall have a tracer wire installed along the length of the pipe. Tracer wire shall be 14 gauge minimum, copper single-conductor wire with insulation and shall be continuous along the pipeline passing through the inside of each valve box.

2.10 DISINFECTION OF WATER SYSTEMS

A. All water systems shall be disinfected in accordance with Local Public Health and Plumbing Code Requirements.

2.11 TESTS AND APPROVALS

A. Pipe lines shall be blown or flushed clean, before piping tests are applied. All plumbing work shall be tested as herein specified. No portion shall be covered, concealed, used or made inaccessible to testing, inspection, repair, correction or replacement until tests thereof have been satisfactorily completed in the presence of the Architect's Authorized Representatives. The Plumbing Subcontractor must accommodate his testing operations to the progress of the project as a whole. Correct all defects appearing under test and repeat the tests until all parts of the work have withstood them successfully.

B. Furnish all labor, material and services for testing, including testing plugs, pumps and compressors; he shall make and remove all temporary piping connections required for the tests and shall dispose of test water and all wastes after tests. Leave all work in good order, ready for full use.

C. Tests on all plumbing systems shall be made in accordance with the requirements of the Local Plumbing Code and the codes, standards, recommended practices and manuals of the National Fire Protection Association.

2.12 MEDICAL FACILITY TESTING

A. Medical Air, Oxygen, Vacuum, Nitrous Oxide, Nitrogen and Nitrous Oxide Evacuation System testing shall be performed in the following manner and sequence:

1. Contractor Tests - the following tests are to be conducted by this Contractor at the appropriate times during the systems installation:
   a. Blowdown Test.
   b. Initial Pressure Testing (initial).
   c. Standing Pressure Test (Final).
   d. Piping Purge.
   e. Cross Connection Test.
   f. Provide written statement that Medical Gas Systems have been installed and tested in accordance with NFPA 99, 1999 Edition, Paragraphs 4-3.4.1.2 through 4-3.4.1.2 (e).

2. The following tests shall be performed after the installation of all gas systems are complete and before connection of the new systems to any existing source. (Reference Paragraph 4-3.4.1.3 System Verification NFPA 99-1999) and shall provide final testing and certification of the systems. Tests shall be performed by W.G. Frank, Medical Services, Inc., 248 Sheep Davis Road Unit #9, Concord, New Hampshire, 03309, or an approved independent Medical Gas Testing Agency. The Plumbing Contractor shall carry in his bid all costs to have this testing performed and retested as many times as the project construction phasing necessitates.
   a. Cross Connection Test.
   b. Valve Test.
   c. Outlet or Inlet Flow Test.
   d. Alarm Testing.
   e. Piping Purge Test.
   f. Piping Purity Test.
   g. Final Tie in Test.
   h. Operational Pressure Test.
   i. Medical Gas Concentration Test.
   j. Medical Air Purity Test.
   k. Labeling.
   l. Source Equipment Verification.
   m. Materials to be furnished by the Testing Agency:
      I. All flow meters, regulators, gauges, adapters and gas analysis equipment. transferred.
      II. Oil free, dry nitrogen test gas.
      III. Individual data sheets containing information of area tested, date and type of test and test results. These data sheets shall be signed by tester and given to the Owner.
      IV. Sampling containers as required for contaminant testing.
   n. Testing Agency Qualifications:
      I. 5 years experience in testing of medical gas systems.
      II. Specialization testing of medical gas systems.

PART 3 - EXECUTION

3.1 WORKMANSHIP

A. Prior to the work of this section, this Contractor must ascertain that preceding work has been accomplished in a manner to permit compliance with the level of quality required by this Section.

B. The entire work provided in this specification shall be constructed and finished in every respect in a workmanlike and substantial manner. It is not intended that the drawings shall show every pipe, fitting, and appliance. Furnish all parts as may be necessary to complete the system in accordance with the best trade practices and to be the satisfaction of the Architect, Engineer and General Contractor.

C. This Contractor shall keep other contractors fully informed as the shape, size and position of all openings required for his apparatus and shall give full information to the General Contractor or other contractors sufficiently in advance of the work so that all openings may be built in advance. Furnish and install all sleeves, supports, etc., specified or required.

D. In the case of failure on the part of this Subcontractor to give proper and timely information as noted above, he shall do his own cutting and patching, or have same done by the General Contractor at this subcontractor's expense, but in any case, without extra expense to the Owner and General Contractor.

E. This Contractor shall obtain detailed information from the manufacturer of apparatus as to the proper method of installing and connecting same. He shall also obtain all information from the General Contractor and the other contractors which may be necessary to facilitate his work and the completion of the whole project.

3.2 CORE DRILLING

A. Where a core hole or opening occur larger than 10 inches in any dimension is required, or where dimension between two openings in less than two times maximum dimension of largest opening, and condition is not shown on architectural or structural drawings, obtain prior written approval of the Owner.

B. At floor slabs and walls where a core hole is to be drilled or opening is to be cut, contractor shall find and mark all reinforcing in both faces located by means of x-ray, pach-ometer, or prof-ometer. Submit sketch indicating core holes, openings, location of rebar, piping, conduit or any other obstruction for review.

C. All holes through concrete or masonry for the passage of plumbing piping not provided by sleeves or openings at the time of casting, shall be cut by the Plumbing Contractor using an approved core boring machine with diamond edge bit and vacuum sludge removal device. The size of holes shall provide for fire stopping around a pipe. The location of all core drilled holes shall be coordinated with the structural reinforcing and be reviewed by the Architect prior to commencing work.

D. Prior to coring, the Plumbing Contractor shall submit a minimum 1/8 in. scale plan, dimensioning the location of proposed cored opening locations and indicating the core diameter. Prior to developing the coring plan, the Plumbing Contractor shall examine the site carefully in an attempt to determine whether there are structural, mechanical or electrical obstacles in the proposed coring locations. Once the plans are reviewed by the Architect and Owner's representative, the Plumbing Contractor may proceed with caution. If an electrical conduit, for example, was hit during coring operations, and it was determined that the Plumbing Contractor was negligent by not noting a conduit turning into the slab below, he would be responsible for the repair cost. If the Contractor were not found to be negligent, then the Owner would assume the cost of the repair.

3.3 TESTING PIPING SYSTEMS

A. Test all work in the presence of the Architect/Engineer and/or Owner, Owner's representative and Plumbing Inspector as called for in local codes.

B. After soil, waste and vent piping is in place and before being furred in, plug lower ends and fill. The system shall be left tight under these conditions and water level shall be maintained intact for a period of at least four hours.

C. Test domestic water piping and service by applying a hydrostatic pressure of 125 psi using a pump for this purpose. Make sure that all lines are properly plugged or capped, and that air has been vented before applying pressure, which shall remain constant without pumping for one hour at least.

D. Gas system piping shall be tested at a pressure of 50 psig and pressure shall be held for two hours minimum.

E. This Contractor shall furnish all equipment, labor and materials, required for these tests.

F. Any leaks in joints or evidence of defective pipe or fittings disclosed by tests shall be immediately corrected by replacing defective parts with new joints or corrected materials. No makeshift repairs effected by caulking threaded pipe with lead wool, application of wicking or patented compounds being permitted. Perform smoke tests as required by local code or by the Architect/Engineer.

3.4 PROTECTION AND CLEANING

A. Each subcontractor shall be responsible for his work and equipment until finally inspected, tested and accepted. Carefully store materials and equipment, which are not immediately installed after delivery on site. Close open ends or work with temporary covers or plug during construction to prevent entry of obstructing materials.

B. Each subcontractor shall protect work and materials of other trades from damage that might be caused by his work or workman and make good damage thus caused.

C. The premises shall be kept reasonably clean at all times, and rubbish shall be removed as directed by the General Contractor.

D. Upon completion of this work, the Contractor shall clean all fixtures and equipment and replace damaged parts. Upon failure of this Contractor to fulfill his obligation, this work will be taken care of at his expense.

3.5 WORK COORDINATION AND JOB COORDINATION

A. Plumbing equipment shall not be installed in congested and possible problem areas without first coordinating the installation of same with the other trades and the General Contractor.

B. Particular attention shall be directed to the coordination of system with all equipment of other trades installed in and above the ceiling areas. Conflicts in heights and clearance above hung ceilings shall be brought to the attention of the General Contractor for a decision before equipment is installed.

C. Furnish to the General Contractor and other trades all information relative to the position of the plumbing installation that will affect them so that they may plan their work and installation accordingly.

3.6 SUPPLEMENTARY STEEL, CHANNEL AND SUPPORTS

A. Furnish and install all supplementary steel, channels and supports required for the proper installation, mounting and support of all equipment.

B. Supplementary steel and channels shall be firmly connected to building construction in a manner approved by the Architect/Engineer.

C. The type and size of the supporting channels and supplementary steel shall be determined by the Plumbing Subcontractor and shall be sufficient strength and size to allow only a minimum deflection in conformance with the manufacturer's requirements for loading.

D. All supplementary steel and channels shall be installed in a neat and workmanlike manner parallel to the walls, floor and ceiling construction. all turns to be made with 90 degree fittings, as required to suit the construction and installation conditions.

3.7 SLEEVES AND INSERTS

A. Sleeves shall be furnished, set and properly secured in place and at all points where piping passes through masonry or concrete. All sleeves shall be of sufficient diameter to provide 1/4-in. clearance around the pipe.

B. Sleeves through concrete slabs, and interior concrete and masonry walls or partitions shall be steel pipe. Fire stop annular openings between sleeves and pipes at floor slab passages and make watertight. Galvanized sleeves and copper piping shall not be placed in concrete.

C. Install UL listed and FM approved inserts or other anchoring devices in concrete and masonry construction as required to support piping. Inserts shall be of the adjustable type as manufactured by Carpenter and Patterson, Grinnell, or Fee and Mason.

3.8 SYSTEM IDENTIFICATION

A. All valves on pipes of every description shall have circular brass valve tags of at least 1-1/2 in. in diameter, attached with brass hooks to each valve stem. Stamp number of the valve and the service, such as "HW", "CW", "GAS", etc., for hot water, cold water, gas, etc., respectively. The numbers of each service shall be consecutive and shall correspond with the numbers indicated for valves and controls on the record drawings and on three printed valve lists. These printed lists shall state number and locations of each valve and control and the section, fixture or equipment which it controls.

B. The printed valve lists shall be prepared in a form to meet the approval of the Architect and Engineer and one copy shall be framed under glass and mounted in approved locations.

C. All plumbing lines and equipment shall be identified by pipe markings, which shall be provided by this Contractor. Markers shall be applied every 20 ft. Markings shall indicate pipe content and direction of flow. The markers shall be as manufactured by Seton Name Plate Corp. or equal.

3.9 SAFETY PRECAUTIONS

A. Furnish, place and maintain proper guards for the prevention of accidents and any other necessary construction required to secure safety of life and property.

3.10 INSERTS AND OPENINGS

A. Inserts: Install inserts or other anchoring devices in concrete and masonry construction as required to support piping. Inserts shall be of the adjustable type as manufactured by Carpenter and Patterson, Grinnell of Fee and Mason.

B. Escutcheons: All exposed pipe, uncovered, passing through walls, floors or ceilings shall be fitted with one piece chrome plated brass escutcheons with set screw holding in position. Floor escutcheons to be deep enough to fit over sleeves, fastened to pipe and extending down to floor.

3.11 PLANS AND SPECIFICATIONS

A. The drawing showing layout of the plumbing systems indicate the approximate location of outlets, apparatus and equipment are schematic. The final determination as to the routing shall be governed by structural conditions and other obstructions.

B. The right to make any reasonable change in the location of outlets, apparatus and equipment up to the time of the roughing-in is reserved by the Architect and Engineer without involving any expense to the Owner or the General Contractor.

C. The specifications supplement the drawings and provide specifics pertaining to the methods of material to be used in the execution of the work.

3.12 SANITARY WASTE, STORM WATER AND VENT SYSTEMS

A. Install cast-iron soil piping according to Cast Iron Soil Pipe and Fittings Handbook (CISPI) Chapter IV, "Installation of Cast Iron Soil Pipe and Fittings."

B. Furnish and install piping to take wastes from all soil and waste stacks, fixtures, drains and equipment as indicated and/or described in these plans and specifications.

C. Unless specifically noted otherwise on the plans, all horizontal piping 4 in. and larger shall be pitched at the rate of 1/8 in. per foot in the direction of the flow. Horizontal piping 3 in. and smaller shall be pitched at the rate of 1/4 in. per foot in the direction of the flow.

D. Vent System: Furnish and install piping to vent all stacks, fixtures, traps and appliances as indicated on the drawings and/or required to meet the Plumbing Code. All vent piping shall be concealed where possible with the horizontal pipe pitching back toward fixtures to allow connection to drain. Whether indicated on plan, riser diagram or not, offset vents below the roof to avoid air intakes, equipment, penthouse mansard etc., bring vents through the roof a minimum of 10 feet away from air intakes, windows, and operable sash and 10 ft. away from other obstructions.

3.13 HOT AND COLD WATER SYSTEMS

A. Furnish and install complete cold, hot and hot water return systems to service all fixtures and equipment indicated on the drawings or specified as requiring cold or hot water. Cold water piping shall start at the connection to the water main indicated on plan and extend to all fixtures and equipment, including piping, fittings and valves requiring connections. Hot water piping shall extend from the hot water heater to all fixtures and equipment, including piping, fittings and valves. In general, piping shall pitch upward in the direction of flow with each branch and riser separately valved and with 1/2 in. hose end drains on the outlet side of the valve and at all low points in the systems. Install valves for each battery of fixtures and other valves as necessary to isolate all parts of these systems. All valves shall be accessible.

B. Hot water piping shall be circulated as shown on plans to ensure uniform temperatures throughout the system. All branches longer than 50 ft. shall be provided with hot water return lines.

3.14 INSULATION

A. Ensure that all pipe and fitting surfaces over which insulation is to be installed are clean and dry.

B. Ensure that insulation is clean, dry, and in good mechanical condition with all factory-applied vapor or weather barriers intact and undamaged. Wet, dirty, or damaged insulation shall not be acceptable for installation.

C. Ensure that pressure testing of piping and fittings has been completed prior to installing insulation.

D. General

1. Install all insulation materials and accessories in accordance with manufacturer's published instructions and recognized industry practices to ensure that it will serve its intended purpose.
2. Install insulation on piping subsequent to installation of heat tracing, painting, and acceptance tests.
3. Install insulation materials with smooth and even surfaces. Insulate each continuous run of piping with full-lenght units of insulation, with single cut piece to complete run. Do not use cut pieces or scraps abutting each other. Butt insulation joints firmly to ensure complete, tight fit over all piping surfaces.
4. Maintain the integrity of factory-applied vapor barrier jacketing on all pipe insulation, protecting it against puncture, tears or other damage. All staples used on cold pipe insulation shall be coated with suitable sealant to maintain vapor barrier integrity.

A. Fittings

1. Cover valves, fittings, and similar items in each piping system using one of the following:
2. Mitered sections of insulation equivalent in thickness and composition to that installed on straight pipe runs.
3. Insulation cement equal in thickness to the adjoining insulation.
4. Owens Corning PVC Fitting Covers insulated with material equal in thickness and composition to adjoining insulation.

B. Penetrations

1. Extend piping insulation without interruption through walls, floors, and similar piping penetrations, except where otherwise specified.

C. Joints

1. Butt pipe insulation against hanger inserts. For hot pipes, it is recommended all joints be staggered when operating temperature is over 400F (204C) double layer. Seal jacketing according to type being used. For cold piping, seal self-sealing laps by firmly rubbing down surface of tape and flap.
2. All pipe insulation ends shall be tapered and sealed, regardless of service.

D. Vertical Piping

1. If specified on contract drawings, all insulated, exposed vertical piping within the building and all insulated piping exposed to the outdoors shall be additionally jacketed with 0.016" thick (0.4 mm) (minimum) aluminum